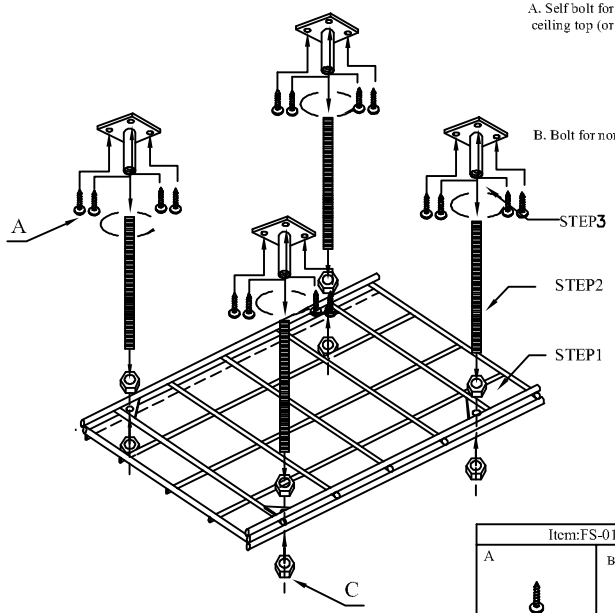

A. Self bolt for wooden ceiling top (or similar species) → A

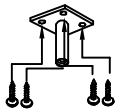

B. Bolt for non-wooden ceiling. → B

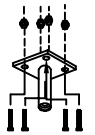

(Drawing shown for wooden ceiling top)

Caution:
1. Please tighten all bolts before mounting the wire grid.
2. Please use the appropriate bolts on the mounting plate.

Note:
1. There are 2 sets of bolts for choice depending on the material of the ceiling.
2. The instruction shown is for wooden ceiling or similar species.

Item:FS-011		Title: Ceiling Wire Grid_6' Wide		
A	B	C	D	E
Self bolt:M10*M6*53 18PCS (2pcs for replacement)	BOLT(5/16*67.5L) 18PCS (2pcs for replacement)	NUT(5/8) 9PCS (1pcs for replacement)	NUT(5/16) 18PCS (2pcs for replacement)	Flat Washer(C17*C82*1.0) 36PCS (4pcs for replacement)

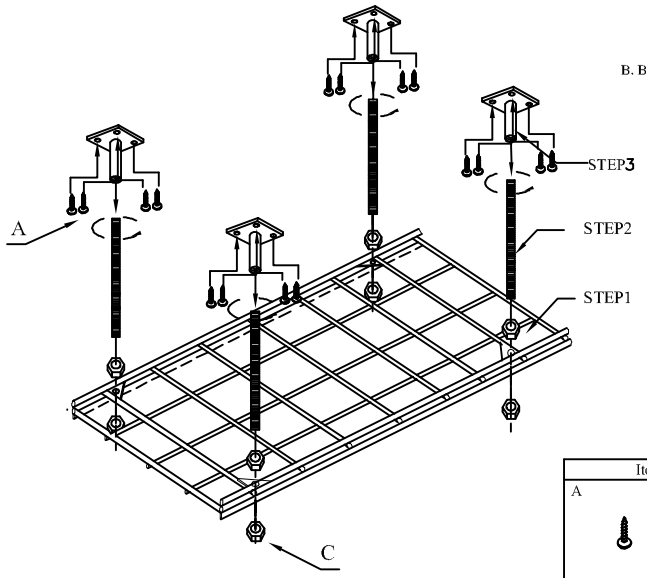

A. Self bolt for wooden ceiling top (or similar species) → A

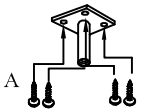

B. Bolt for non-wooden ceiling. → B

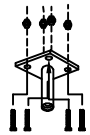

(Drawing shown for wooden ceiling top)

Caution:
1. Please tighten all bolts before mounting the wire grid.
2. Please use the appropriate bolts on the mounting plate.

Note:
1. There are 2 sets of bolts for choice depending on the material of the ceiling.
2. The instruction shown is for wooden ceiling or similar species.

Item:FS-010		Title: Ceiling Wire Grid_8' Wide		
A	B	C	D	E
Self bolt:M10*M6*53 18PCS (2pcs for replacement)	BOLT(5/16*67.5L) 18PCS (2pcs for replacement)	NUT(5/8) 9PCS (1pcs for replacement)	NUT(5/16) 18PCS (2pcs for replacement)	Flat Washer(C17*C82*1.0) 36PCS (4pcs for replacement)