Mall Area Map

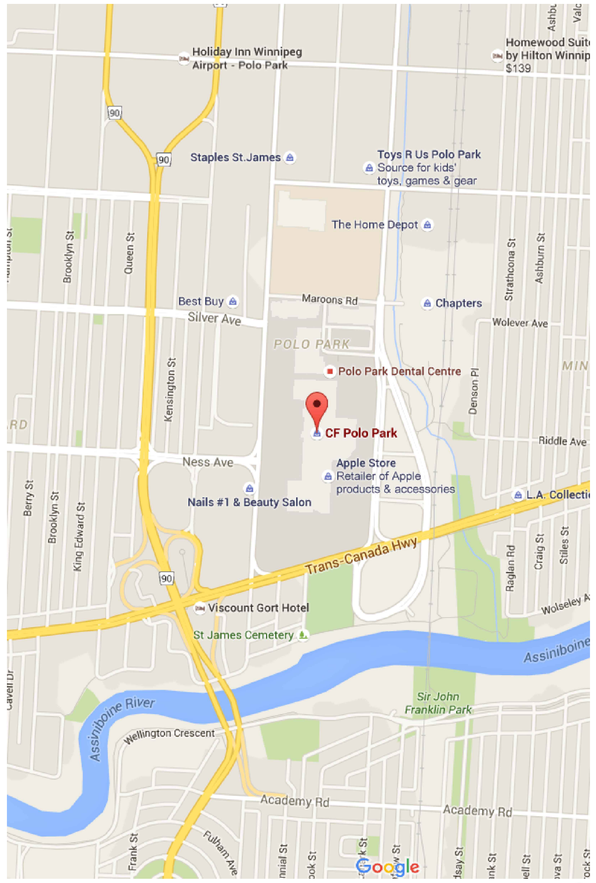

Site Plan

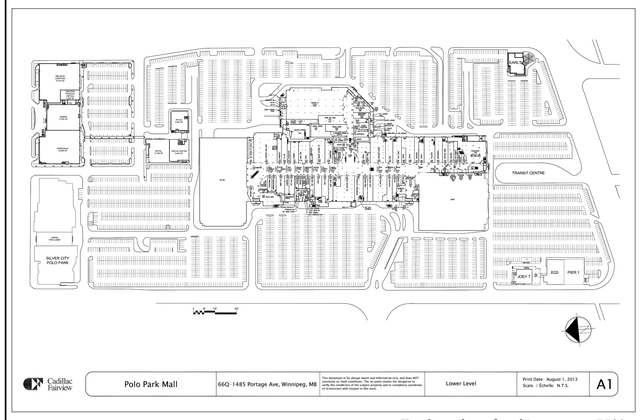

Cadillac Fairview	Polo Park Mall	66Q -1485 Portage Ave, Winnipeg, MB	This document is for design intent and informational only, and does NOT constitute as built conditions. The no-parkin areas this designation is approximate and subject to change. Measurements are to complete centerlines of structure with exterior walls or stems.	Lower Level	Print Date : August 1, 2013 Scale : Échelle: N.T.S.	A1

Total number of parking spaces: 5580

Mall Map

BESTSELLER

NO. C.R.U.: 304 & 305

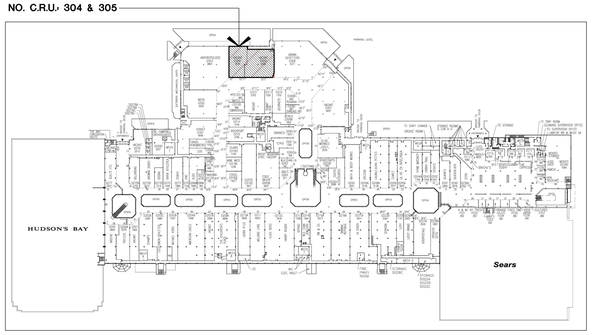

Code Summary

Client

BS1505

BESTSELLER

CF - POLO PARK

1485 PORTAGE AVENUE
WINNIPEG, MANITOBA

Symbols

Symbol	Description
A	DETAIL REFERENCE
A 1	SECTION REFERENCE
1	ELEVATION REFERENCE
1	DRAWING REFERENCE
0'-0"	CEILING HEIGHT A.F.F.
1	WALL TYPE
000	DOOR NO.
W	FINISH NO.
1	REVISION NO.
000	ROOM NO.
XX000	DETAIL NO.

Directory

LANDLORD

COMPANY NAME: CADILLAC FAIRVIEW CORPORATION
ADDRESS: SUITE 216-3625 SHAGANAPPI TRAIL N.W.
ADDRESS: CALGARY, ALBERTA, T3A 0E2
CONTACT: COURTNEY VINCENT
TEL.: (403) 247-5930
FAX: COURTNEY.VINCENT@CADILLACFAIRVIEW.COM

CLIENT

COMPANY NAME: BESTSELLER
ADDRESS: 225A DE LIEGE OUEST
ADDRESS: MONTREAL, QUEBEC, H2P 1H4
CONTACT: BRIAN LACOMBE
TEL.: (514) 385-7660
FAX: EMAIL: BRIAN.LACOMBE@BESTSELLER.COM

ARCHITECT

NOM COMPAGNIE: VICTOR SUEN ARCHITECT
ADRESSE: 23 STORMONT DRIVE
ADRESSE: WINNIPEG , MANITOBA, R3V 1L9
CONTACT: VICTOR SUEN, M.A.A. , M.R.A.I.C.
(204) 228-0230
(204) 261-6341 VICTORSUENARCHITECT@MTS.NET

INTERIOR DESIGN CONSULTANT

NOM COMPAGNIE: LODA DESIGN INC.
ADRESSE: 1200 DE LOUVAIN OUEST
ADRESSE: MONTREAL, QUEBEC H4N 1G5
CONTACT: TAWNYA WEKLER
TEL.: 514-382-0571 EXT. 232
FAX: 514-382-9446

MECHANICAL & ELECTRICAL ENGINEER

COMPANY NAME: DALLAIRE CONSULTANTS
ADRESSE: 31 DESALINIERS, SUITE #210
ADRESSE: ST-LAMBERT, QUEBEC J4P 1L7
CONTACT: PHILIPPE DALLAIRE
TEL.: 450-671-3131
FAX: 450-671-3176 DALLAIRECONSULTANTS@VIDEOTRON.CA

STOCKROOM STORAGE CONSULTANT

NOM COMPAGNIE: PROFORMA RETAIL SPACE SOLUTIONS
ADRESSE: 67 COPERNICUS BLVD UNIT 6
ADRESSE: BRANTFORD, ONTARIO, N3P 1N4
CONTACT: KATHRYN MITCHELL
(519) 758-1639 EXT 201
KATHRYN@PROFORMACANADA@BELL.NET.CA

SOUND-SYSTEM CONSULTANT

NOM COMPAGNIE: STINGRAY
ADRESSE: 730 WELLINGTON STREET, MONTREAL
ADRESSE: QUEBEC H3C 1T4
CONTACT: MONIA RATEN
(514) 664-1244 EXT 2329
MRATEN@STINGRAY.COM

SECURITY / ALARM SYSTEM CONSULTANT

NOM COMPAGNIE: VISION ALARM
ADRESSE: 8400 COTE DE LIESSE SUITE # 210
ADRESSE: MONTREAL, QUEBEC, H4T 1G7
CONTACT: GAO (514) 448-2930 GAO@VISIONALARM.CA
PETER MERGUI (514) 651-6884 SPRINTALARM@GMAIL.COM

ANTI-THEFT SYSTEM CONSULTANT

NOM COMPAGNIE: TYCO INTEGRATED SECURITY / SENSORMATIC
ADRESSE: 2400 SKYMARK AVE
ADRESSE: MISSISSAUGA, ONTARIO L4W 5K5
CONTACT: GREG FINN
(514) 909-5756
GFINN@TYCO.CA

INTERACTIVE SCREEN CONSULTANT

NOM COMPAGNIE: AXIS4 MEDIA
ADRESSE: -
ADRESSE: -
CONTACT: CHARLES DALLAIRE
-
CD@AXIS4MEDIA.CA

Index

No.	Description	Issued to Client	Issued to Engineer	Issued to Contractor	Issued for Bidding	Issued for Permit							
A-0.00	COVER PAGE	○		○	○	○							
A-0.10	GENERAL NOTES	○		○	○	○							
A-0.20	RESPONSABILITY SCHEDULE	○		○	○	○							
A-1.00	SHELL & DEMOLITION PLAN	○	○	○	○	○							
A-1.10	CONSTRUCTION PLAN	○	○	○	○	○							
A-1.11	POWER PLAN & ELECTRICAL PLAN	○	○	○	○	○							
A-1.20	REFLECTED CEILING PLAN	○	○	○	○	○							
A-1.21	LIGHTING LAYOUT	○	○	○	○	○							
A-1.30	FLOOR FINISH LAYOUT	○		○	○	○							
A-1.40	FLOOR & WALL FIXTURE PLAN	○	○	○	○	○							
A-1.41	MOVABLE FLOOR FIXTURE LAYOUT	○		○	○	○							
A-2.10	INTERIOR ELEVATIONS	○		○	○	○							
A-2.11	INTERIOR ELEVATIONS	○		○	○	○							
A-4.10	STOREFRONT PLAN AND ELEVATION	○		○	○	○							
A-4.11	STOREFRONT SECTIONS & DETAILS	○		○	○	○							
A-4.12	STOREFRONT DETAILS	○		○	○	○							
A-4.13	STOREFRONT SIGNAGE DETAILS	○		○	○	○							
A-4.20	CASH COUNTER DETAILS												
A-4.21	BACKBAR DETAILS												
A-4.21	CONCIERGE DESK DETAILS												
A-4.40	FITTING ROOM PLANS	○			○								
A-4.41	FITTING ROOM ELEVATIONS	○			○								
A-4.42	FITTING ROOM DETAILS	○			○								
A-4.50	WASHROOM DETAILS	○		○	○								
A-5.10	CONSTRUCTION DETAILS - CEILING	○		○	○								
A-5.11	CONSTRUCTION DETAILS - LIGHTING	○		○	○								
A-5.12	CONSTRUCTION DETAILS - LIGHTING	○		○	○								
A-5.13	CONSTRUCTION DETAILS	○		○	○								
A-5.14	CONSTRUCTION DETAILS - MIRRORS	○		○	○								
A-5.15	CONSTRUCTION DETAILS - MIRRORS	○		○	○								
A-5.16	CONSTRUCTION DETAILS - WOOD PLANKING	○		○	○								
A-5.17	CONSTRUCTION DETAILS - WOOD PLANKING	○		○	○								
A-5.18	CONSTRUCTION DETAILS - PHOTOFRAMES	○		○	○								
A-5.19	CONSTRUCTION DETAILS - DOORS	○		○	○								
A-6.00	LIGHTING & POWER LEGENDS	○	○	○	○	○							
A-6.01	LEGENDS	○		○	○	○							
A-6.02	FLOOR FIXTURE LEGENDS	○		○	○	○							
A-6.03	FLOOR ACCESSORY LEGENDS	○		○	○	○							

LODA DESIGN
L.O.D.A inc.
1200 de Louvain Ouest, Montreal, Quebec, Canada H4N 1G5
(t) 514.382.0571 www.lodadesign.com

COPYRIGHT NOTICE

COPYRIGHT IN THESE DOCUMENTS BELONGS TO LODA INC. AND/OR SOME TRIPARTY MEMBERS. THESE DOCUMENTS MAY NOT BE FORWARDED TO OTHERS, TRANSMITTED, DOWNLOADED OR REPRODUCED IN ANY FORMAT, WHETHER PRINT OR ELECTRONIC WITHOUT THE EXPRESS, WRITTEN PERMISSION OF THE COPYRIGHT OWNER.

DISCLAIMER

USE OF THESE DOCUMENTS IS AT THE USER'S OWN RISK. THE USER SHALL INDEMNIFY AND SAVE HARMLESS LODA INC., AND THEIR EMPLOYEES, AGENTS AND CONSULTANTS FROM AND AGAINST ALL CLAIMS, LOSSES, DEMANDS, COSTS AND EXPENSES (INCLUDING LEGAL FEES), DAMAGES OR RECOVERIES (INCLUDING ANY AMOUNTS PAID IN SETTLEMENT) ARISING BY REASON OF, CAUSED, OR ALLEGED TO BE CAUSED, BY THE USER'S RELIANCE ON THESE DOCUMENTS.

No	DATE	REVISIONS	BY
-	24-11-2015	ISSUED FOR CONSTRUCTION	TW
-	24-11-2015	ISSUED FOR PERMIT	TW
-	17-11-2015	ISSUED TO CLIENT - FIRST SET	TW
-	17-11-2015	ISSUED TO LANDLORD - FOR APPROVAL	TW
-	17-11-2015	ISSUED TO ENGINEER - FINAL SET	TW
-	02-11-2015	ISSUED TO ENGINEER - FIRST SET	TW

BESTSELLER

225-A DE LIEGE OUEST
MONTREAL, QUEBEC, H2P 1H4

JOB
POLO PARK - CF
1485 PORTAGE AVENUE
WINNIPEG, MANITOBA, R3G 0W4
C.R.U. NO.: 304 & 305

SHEET TITLE				
COVER SHEET				
DRAWN BY	CHECKED	DATE	SHEET NO	
TW	TI	OCT-2015	A-0.00	
JOB No.		SCALE		
BS1505		-		

ABBREVIATIONS

A	
A.F.F	ABOVE FINISHED FLOOR
APPROX	APPROXIMATE
B	
BAL	BALANCE
BLDG	BUILDING
BL-D	BULK-EAD
C	
CH	CEILING HEIGHT
CLG	CEILING
CLR	CLEAR
CONC	CONCRETE
CONT	CONTINUOUS
D	
DET	DETAIL
DIA	DIAMETER
DIM	DIMENSION
DN	DOWN
DWG	DRAWING
E	
EA	EACH
EQ	EQUAL
EXT	EXTERIOR
EXT'G	EXISTING
F	
FF&E	FURNITURE AND EQUIPMENT
F.F.E.	FINISH FLOOR ELEVATION
FHC	FIRE HOSE CABINET
FIN	FINISH
FIXT	FIXTURE
FLOU	FLUORESCENT
F.O.S.	FACE OF STUD
FT	FOOT
G	
GA	GUAGE
GL	GLASS
GWB	GYPSUM WALL BOARD
GYP	GYPSUM
H	
HVAC	HEATING, VENTILATION &AIR CONDITIONING
H.W.	HOT WATER TANK
HOR	HORIZONTAL
I	
I.D.	INSIDE DIAMETER
IN	INCH
INT	INTERIOR
INCL	INCLUDING
K	
K.D.	KNOCK DOWN
K.P.	KICK PLATE
L	
LAM	LAMINATE
LH	LEFT-HAND
LX	LUX
M	
MAX	MAXIMUM
MECH	MECHANICAL
MIN	MINIMUM
MISC	MISCELLANEOUS
MFR	MANUFACTURER
MTL	METAL
N	
N.I.C.	NOT IN CONTRACT
NO	NUMBER
NOM	NOMINAL
N.T.S.	NOT TO SCALE
O	
O.A.	OVER ALL
O.D.	OUTSIDE DIAMETER
P	
P.LAM	PLASTIC LAMINATE
PT	PAINTED
PLY	PLYWOOD
R	
RAD	RADIUS
REQ'D	REQUIRED
RH	RIGHT-HAND
RM	ROOM
R.O.	ROUGH OPENING
R.W.L.	RAIN WATER LEADER
S	
SIM	SIMILAR
SPEC	SPECIFICATION
SQ	SQUARE
SQ.FT.	SQUARE FEET
S.S.	STAINLESS STEEL
STD	STUD
STD	SYSTEM
T	
T&G	TONGUE AND GROOVE
T.O.	TOP OF
TYP	TYPICAL
U	
U/S	UNDERSIDE OF
U.O.N.	UNLESS OTHERWISE NOTED
V	
VC	VINYL COMPOSITE
VERT	VERTICAL
V.I.F.	VERIFY HEIGHT IN FIELD
V.I.F.	VERIFY IN FIELD
W	
W.C.	WATER CLOSET
W/	WITH
W/O	WITHOUT

GENERAL NOTES

I. THE G.C. IS HERE-IN SPECIFICALLY DIRECTED, AS A CONDITION OF THE CONTRACT, TO ACQUAINT HIMSELF WITH THE ARTICLES CONTAINED IN THE FOLLOWING NOTES AND IN THE KEY NOTES SPECIFIC TO EACH DRAWING, AND TO NOTIFY ALL SUB-CONTRACTORS AND ALL OTHER PARTIES OF THE CONTRACT, AND BIND THEM TO ITS CONDITIONS.

2. THE CONTRACT DOCUMENTS AND NOTES FOR THIS PROJECT SHOULD BE USED IN CONJUCTION WITH THE DOCUMENTS AND SPECIFICATIONS PROVIDED BY ALL RELATED CONSULTANTS AND PROFESSIONALS ON THE PROJECT DIRECTORY FOUND ON PAGE A0.00.

3. THE GC SHALL REVIEW THE DOCUMENTS AND VERIFY ALL SITE CONDITIONS. ANY OMISSIONS / CONFLICTS SHALL BE REPORTED IN WRITING WITHIN THREE (3) BUSINESS DAYS OF BID RETURN. THE G. C. WARRANTS, BY TENDERING HIS BID, THAT WORK IS BUILDABLE AS SHOWN. CLAIMS DUE TO IGNORANCE OF SITE CONDITION WILL NOT RECEIVE CONSIDERATION.

4. THE G.C. IS RESPONSIBLE TO EXECUTE THE CONSTRUCTION OF THIS PROJECT ACCORDING TO ALL GOVERNING CODES AND REGULATIONS, INCLUDING ANY BUILDING SPECIFIC REGULATIONS AND CONDITIONS.

5. THE G.C. SHALL FILE, OBTAIN AND PAY FOR ALL FEES FOR PERMITS, AGENCY APPROVALS, CONTROLLED INSPECTIONS AND FINAL WRITE-OFFS FOR PROJECT COMPLETION. COPIES OF APPLICABLE TRANSACTIONS SHALL BE FORWARDED TO THE CLIENTS REPRESENTATIVE PRIOR TO COMMENCING THE WORK.

6. THE GC IS RESPONSIBLE TO OBTAIN THE CERTIFICATE OF OCCUPANCY AND SHALL PROVIDE AND DISTRIBUTE ALL NECESSARY DOCUMENTS TO ALL PROFESSIONALS ALLOWING THREE (3) WORKING DAYS FOR THEIR COMPLETION AND RETURN.

7. THE GC SHALL ENSURE THAT ALL PARTIES ARE WORKING WITH DOCUMENTS OF THE LATEST "ISSUE FOR CONSTRUCTION" PRIOR TO COMMENCING CONSTRUCTION.

8. DRAWINGS FOR THE ELECTRICAL SERVICE AND WIRING AS WELL AS DRAWINGS FOR THE MECHANICAL SERVICES SUCH AS THE H.V.A.C. AND SPRINKLERS, ARE TO BE PREPARED BY AND ARE THE RESPONSIBILITY OF THE MECHANICAL AND ELECTRICAL ENGINEER. SUBCONTRACTORS ARE TO FOLLOW THEIR DRAWINGS AND SPECIFICATIONS. G.C. TO COORDINATE.

9. WRITTEN DIMENSIONS GOVERN PARTITION LOCATIONS, DIMENSIONS AND TYPES. LARGE SCALE DRAWINGS AND DETAILS TAKE PRECEDENCE OVER SMALL SCALE DRAWINGS.

10. IN CASE OF CONFLICT, THE DESIGNER IS TO BE NOTIFIED FOR WRITTEN CLARIFICATION PRIOR TO PROCEEDING WITH CONSTRUCTION.

11. THE G.C. SHALL MAINTAIN FOR THE ENTIRE LENGTH OF HIS CONTRACT ALL EXIT PATHS, EXIT LIGHTING, FIRE PROTECTIVE ALARMS / DEVICES AND TEMPORARY LIGHTING OF MIN 5 FOOT CANDLES (50 LX) TO CONFORM TO LOCAL BUILDING CODE AND LANDLORD REQUIREMENTS.

12. THE GC SHALL BE RESPONSIBLE FOR THE DAILY CLEANING OF THE PROJECT TO ITS COMPLETION. CLEANING SHALL INCLUDE THE INTERIOR OF THE LEASED PREMISES AND THE PATH OF TRAVEL TO THE PROJECT.

13. THE G.C. SHALL BE RESPONSIBLE TO PROTECT THE EXISTING HVAC AND SPRINKLER SYSTEMS DURING THE CONSTRUCTION PERIOD FROM DUST INFILTRATION AND DAMAGE. G.C. TO CLEAN ALL AIR DUCTS AND RETURNS, FREE OF CONSTRUCTION DUST AND DEBRIS, AND REPLACE ANY/ALL FILTERS OF THE VENTILATION SYSTEM PRIOR TO HAND-OVER OF STORE TO TENANT.

14. THE G.C. IS RESPONSIBLE FOR THE FINAL CLEANING OF THE PROJECT PRIOR TO TURN OVER TO THE CLIENT, AND SHALL INCLUDE ANY AND ALL SURFACES, THE STOREFRONT AND COMPONENTS THERE OF, THE PATH OF TRAVEL TO THE PROJECT AND THE REPLACING OF ANY AND ALL FILTERS.

15. THE G.C. SHALL ENSURE THAT ALL COMBUSTIBLE MATERIALS SHALL MEET ALL APPLICABLE CODES AND SPECIFICATION WERE-IN. ALL PLYWOOD OR DIMENSIONAL LUMBER SHALL BE "FIRE RATED" AND BARE THE STAMP AS RECOGNISED BY THE GOVERNING AUTHORITIES.

16. ALL CONSTRUCTION WORK SHALL BE PERFORMED DURING NORMAL BUSINESS HOURS. A SCHEDULE OF WORK THAT MAY BE DEEMED DISRUPTIVE (DELIVERIES, UTILITY OUTAGES, ETC) IS TO BE CO-ORDINATED WITH THE L.L. ON-SITE REPRESENTATIVE AND RECEIVE THEIR APPROVAL.

17. THE G.C. SHALL CO-ORDINATE, RECEIVE, INSPECT, UNLOAD, STORE, INSTALL AND FINISH ANY AND ALL "OWNER SUPPLIED" ITEMS.

18. THE G.C. IS RESPONSIBLE TO PROVIDE AND CO-ORDINATE ALL DOCUMENTS PERTAINING TO WRITTEN CERTIFICATION THAT ALL INSTALLED SYSTEMS ARE IN COMPLIANCE WITH CONTRACT DOCUMENTS AND HAVE BEEN TESTED AND ARE FULLY OPERATIONAL.

19. THE G.C. SHALL MAINTAIN COMPLETE UP TO DATE RECORD OF CONSTRUCTION AND SHALL PROVIDE THE REQUIRED INFORMATION TO THE PROJECT DESIGNERS AND ENGINEERS TO PREPARE COMPLETE "AS-BUILT" DOCUMENTS.

20. UPON COMPLETION OF THE PROJECT, THE G.C. SHALL PROVIDE THE CLIENT ALL OPERATION AND INSTRUCTION MANUALS, SIGNED WARRANTIES AND BONDS RELEVANT TO THE SYSTEMS AND EQUIPMENT FOUND HERE-IN.

21. THE GENERAL CONTRACTOR (G.C.) AND ALL HIS/HER SUB-CONTRACTORS IS TO FOLLOW BUILDING CODE SPECIFICATIONS AND/OR ALL LOCAL APPLICABLE CODES AND REGULATIONS.

22. THE TENANTS STOREFRONT MUST BE SELF SUPPORTING AND SHALL NOT BE SUSPENDED FROM THE MALL SOFFIT.

23. THE G.C. IS RESPONSIBLE TO ENSURE AT LEAST 1 SET OF L.L. APPROVED FINAL DOCUMENTS AND 1 SET OF PERMIT DOCUMENTS BE ON THE JOB SITE AT ALL TIMES. ALL CONSTRUCTION IN THE PROJECT MUST STRICTLY CONFORM TO ALL L.L. NOTES AND COMMENTS. ANY NON-CONFORMING WORK WILL BE REQUIRED TO BE RE-CONSTRUCTED, AT THE GC'S SOLE COST AND EXPENSE.

24. IN AN EFFORT TO IDENTIFY POTENTIAL CONFLICTS WITH SITE CONDITIONS AND THE CONTRACT DOCUMENTS, THE GC WILL TRACE ALL PARTITIONS, LIGHT FIXTURES, CEILING TRANSITIONS AND CEILING ELEMENTS ONTO THE SUBFLOOR FOR REVIEW AND APPROVAL BY LODA PRIOR TO COMMENCING CONSTRUCTION. SHOULD CONFLICTS ARISE, THEY SHALL BE RESOLVED AND REVISED DOCUMENTS ISSUED. THE GC SHALL BEAR THE COSTS RELATED TO ANY FURTHER CONFLICTS DUE TO IGNORANCE OF SITE CONDITIONS AND / OR DRAWING SPECIFICATIONS.

25. THE DRAWINGS DO NOT ILLUSTRATE EVERY CONDITION. THE DRAWINGS INDICATE LOCATION, DIMENSIONS AND TYPICAL DETAILS OF CONSTRUCTION. WORK NOT EXPRESSLY DETAILED SHALL BE OF CONSTRUCTION SIMILAR TO PARTS THAT ARE DETAILED. WHERE DISCREPANCIES OCCUR, THEY SHALL BE REPORTED TO THE DESIGNER FOR RESOLUTION.

26. IN THE EVENT OF INCONSISTENCIES AMONG THE CONTRACT DOCUMENTS, THE DESIGNER SHALL INTERPRET THEM WHEN ASKED TO DO SO BY THE CLIENT AND OR G.C.. THE DESIGNER SHALL NOT BE RESPONSIBLE FOR THE RESULTS OF SUCH INTERPRETATIONS MADE BY OTHERS.

27. CEILING TRANSITIONS AND LIGHTING PATTERN(S) TAKE PRECEDENCE OVER NEW MECHANICAL INSTALLATIONS.

28. THE G.C. SHALL ENSURE ALL MATERIALS, LABOUR AND EQUIPMENT USED, BE OF THE HIGHEST QUALITY AND SHALL BE FREE OF ALL DEFECTS TO THE SATISFACTION OF THE DESIGNER AND THE CLIENT.

29. THE G.C. SHALL BE RESPONSIBLE TO ADEQUATELY PROTECT ALL WORK AND MATERIALS AGAINST DAMAGE, BREAKAGE, COLLAPSE, DISTORTION AND / OR MISALIGNMENT IN ACCORDANCE OF STANDARDS AND GOOD PRACTICE

30. THE G.C. SHALL ENSURE A SMOOTH AND LEVEL SUBFLOOR READY TO RECEIVE THE NEW FLOOR FINISHES. DEVIATIONS SHALL NOT EXCEED 1/4" OVER 10 FT, NON-CUMULATIVE. CONDITION OF THE SUB FLOOR TO BE FINALIZED AT THE TIME OF APPROVAL OF THE FLOOR TRACING.

31. THE G.C. SHALL SUBMIT SHOP DRAWINGS OF ANY AND ALL CUSTOM-MADE ITEMS DESCRIBED IN THESE DOCUMENTS TO LODA FOR REVIEW AND APPROVAL PRIOR TO COMMENCING THEIR FABRICATION.

32. PARTITIONS ARE DIMENSIONED FROM FINISH-FEED FACE TO FINISH-FEED FACE, UNLESS OTHERWISE NOTED. DIMENSIONS MARKED "CLEAR" OR "HOLD" SHALL BE MAINTAINED AND SHALL ALLOW FOR THICKNESS OF FINISHES.

33. G.C. WILL SUPPLY AND INSTALL ALL MATERIALS REQUIRED TO CONSTRUCT THE PARTITIONS AS PER CONSTRUCTION DRAWING. ALL FRAMING TO BE DOUBLE AT OPENINGS. BLOCKING IS TO BE INSERTED AS REQUIRED TO SUPPORT SURFACE MOUNTED INSTALLATIONS.

34. G.C. WILL SUPPLY AND INSTALL ALL MATERIALS REQUIRED TO CONSTRUCT THE CEILING AND CEILING BULKHEADS AS PER CEILING DRAWING. THE CEILING TO BE GYPSUM BOARD ON METAL SUSPENSION, AND/OR SUSPENDED T-BAR, MUST BE SUPPORTED FROM THE EXISTING STRUCTURE. NOT FROM DUCTWORK OR CONDUITS OR ROOF DECK.

35. ALL VERTICAL DIMENSIONS ARE FROM FINISHED FLOOR, UNLESS OTHERWISE NOTED.

36. DOOR OPENINGS IN PARTITIONS NOT DIMENSIONED ARE TO BE LOCATED 4" FROM PERPENDICULAR / ADJACENT WALLS.

37. ALL PENETRATIONS AT RATED CONSTRUCTION SHALL BE PROTECTED TO MAINTAIN THEIR RATING.

38. THE G.C. IS TO PROVIDE AND INSTALL ALL BLOCKING REQUIRED TO SUPPORT HANG ITEMS AND SYSTEMS.

39. THE G.C. IS RESPONSIBLE TO REPAIR, REPLACE, REFINISH ANY BASE BUILDING MATERIAL THAT HAS BEEN DAMAGED DURING THIS CONTRACT PERIOD TO THE FULL SATISFACTION OF THE L.L.

40. ALL INTERIOR WALL AND CEILING FINISH SHALL NOT EXCEED 150 FLAME SPREAD RATING

DEFINITIONS

1. "G.C." AS USED IN THESE DOCUMENTS SHALL MEAN THE GENERAL CONTRACTOR AWARDED THE CONTRACT TO REALISE THIS PROJECT.

2. "P.O." AS USED IN THESE DOCUMENTS SHALL MEAN THE CLIENT AWARDING THE CONTRACT(S) TO REALISE THIS PROJECT.

3. "L.L." AS USED IN THESE DOCUMENTS SHALL MEAN THE LANDLORD / BUILDING OWNER OR IT'S REPRESENTATIVE.

4. "DESIGNER" AS USED IN THESE DOCUMENTS SHALL MEAN THE PROFESSIONAL AS DESCRIBED IN THE DIRECTORY ON PAGE A0.00.

5. "ENGINEER" AS USED IN THESE DOCUMENTS SHALL MEAN THE PROFESSIONAL(S) AS DESCRIBED IN THE DIRECTORY ON PAGE A0.00.

6. "ARCHITECT" AS USED IN THESE DOCUMENTS SHALL MEAN THE ARCHITECT OF RECORD AS DESCRIBED IN THE DIRECTORY ON PAGE A0.00.

7. "LEASED PREMISES" AS USED IN THESE DOCUMENTS SHALL MEAN THE FLOOR AREA AS INDICATED ON THE LEASE OUTLINE DRAWING (LOD) AS ISSUED BY THE LANDLORD.

8. "DEMISING WALLS" AS USED IN THESE DOCUMENTS SHALL MEAN THE ACTUAL SEPARATION WALL(S) AS DEFINED BY THE BUILDING CODE.

9. "PROJECT" AS USED IN THESE DOCUMENTS SHALL ENCOMPASS THE WORK AND FLOOR AREA(S) AS DESCRIBED IN THESE DOCUMENTS.

10."ALIGN" AS USED IN THESE DOCUMENTS SHALL MEAN TO ACCURATELY LOCATE FINISHED FACES IN THE SAME PLANE.

11. "TYPICAL" AS USED IN THESE DOCUMENTS SHALL MEAN THAT THE CONDITION IS THE SAME OR REPRESENTATIVE FOR ALL SIMILAR CONDITIONS THROUGH-OUT, UNLESS OTHERWISE NOTED.

12. "CLEAR" OR "HOLD" AS USED IN THESE DOCUMENTS SHALL MEAN TO MAINTAIN THE DESIRED DIMENSION FROM FINISHED FACE TO FINISHED FACE AND SHALL ALLOW FOR THICKNESS OF FINISHES.

13. "BALANCE" AS USED IN THESE DOCUMENTS SHALL MEAN THAT THIS DIMENSION IS NOT CRITICAL IN DETERMINING THE LAYOUT.

14. "OWNER SUPPLIED" AS USED IN THESE DOCUMENTS SHALL MEAN TENANT TO FURNISH.

ACCESSIBILITY NOTES

1. ALL HANDICAP AND / OR EXIT PATH DOORS SHALL HAVE A MINIMUM 24" CLEAR HORIZONTAL OPEN SURFACE / AREA AT THE STRIKE SIDE / PULL SIDE OF THE DOORS AND A MINIMUM 12" CLEAR HORIZONTAL OPEN SURFACE / AREA AT THE STRIKE SIDE / PUSH SIDE OF THE DOOR. DOOR IS EQUIPPED WITH A DOOR CLOSER DEVICE.

2. TOILET FLUSH CONTROLS SHALL BE OPERABLE WITH ONE (1) HAND AND SHALL NOT REQUIRE TIGHT GRASPING, PINCHING OR TWISTING OF THE WRIST. CONTROLS FOR THE FLUSH VALVES SHALL BE MOUNTED ON THE WIDE SIDE OF THE TOILET AREAS, NO MORE THAN 44" ABOVE THE FLOOR. THE FORCE REQUIRED TO ACTIVATE CONTROLS SHALL BE NO GREATER THAN 5 LBS.

3. FAUCET CONTROLS CONTROLS AND OPERATING MECHANISMS SHALL BE OPERABLE WITH ONE (1) HAND AND SHALL NOT REQUIRE TIGHT GRASPING, PINCHING OR TWISTING OF THE WRIST. THE FORCE REQUIRED TO ACTIVATE CONTROLS SHALL BE NO GREATER THAN 5 LBS. (22N INTERIOR DOORS)

4. HOT WATER AND DRAIN PIPES UNDER SINKS, LAVATORIES SHALL BE INSULATED OR OTHERWISE COVERED. THERE SHALL BE NO SHARP OR ABRASIVE SURFACES / EDGES UNDER THESE UNITS.

5. GRAB BARS, FASTENERS AND MOUNTING DEVICES SHALL BE DESIGNED FOR LOAD OF 250 LB PER LINEAR FOOT. (1.5KN)

6. ALL DOOR OPENING LEVERS OR HANDLES TO BE INSTALLED BETWEEN 33" AND 44" A.F.F.

7. G.C. TO REFER TO SECTION 3.8. OF THE BUILDING CODE FOR FURTHER REGULATIONS.

FINISH NOTES

1. THE GC SHALL ENSURE THAT SURFACES TO RECEIVE FINISHES ARE TRUE AND FREE OF IRREGULARITIES. DO NOT PROCEED WITH WORK UNTIL UNSATISFACTORY CONDITIONS HAVE BEEN CORRECTED. COMMENCEMENT OF WORK SHALL INDICATE INSTALLER'S ACCEPTANCE OF SUBSTRATE.

2. ALL GYPSUM BOARD SURFACES SHALL BE TAPED AND FEATHERED SMOOTH TO RECEIVE A MINIMUM OF ONE (1) COAT SEALER AND TWO (2) COATS OF FINISH PAINT.

3. REFER TO FINISH SCHEDULE ON PAGE A6.00 FOR SPECIFIED FINISHES. NO FINISH SUBSTITUTIONS CAN BE MADE.

4. WHERE PAINT COLORS CHANGE, CORNERS ARE TO BE CUT-IN FREE OF OVERLAPPING.

5. ALL FINISHES ARE TO BE APPLIED IN STRICT ACCORDANCE TO MANUFACTURER'S SPECIFICATIONS.

6. WHERE MATERIALS ARE NOT RETURNABLE, SUBMIT SAMPLES FOR APPROVAL TO LODA BEFORE PLACING FULL ORDERS. NOTIFY LODA IMMEDIATELY OF LONG LEAD-TIME ORDER ITEMS.

7. UNLESS OTHERWISE NOTED, ALL AIR DIFFUSER GRILLES AND ACCESS TRAPS SHALL BE FINISHED TO MATCH THE ADJACENT WALL / CEILING FINISH.

8. ALL INTERIOR WALL AND CEILING FINISH SHALL NOT EXCEED 150 FLAME SPREAD RATING

INTERPRETATIONS AND CONFLICTS

1. BRING ANY DISCREPANCIES BETWEEN DIFFERENT DRAWINGS, BETWEEN THE DRAWINGS AND FIELD CONDITIONS OR BETWEEN THE DRAWINGS AND SPECIFICATIONS, OR ANY APPARENT OMISSIONS, TO THE ATTENTION OF THE ARCHITECT/ENGINEER PRIOR TO SUBMISSION OF ANY BID. AFTER AWARD OF CONTRACT, THE INTERPRETATION OF ANY CONFLICT WILL BE MADE BY ARCHITECT AND SHALL BE ACCEPTED AS FINAL.

2. THE FAILURE TO QUESTION ANY CONTROVERSIAL ITEM WILL CONSTITUTE ACCEPTANCE BY THE BIDDER, WHO SHALL EXECUTE SAME TO THE SATISFACTION OF THE ARCHITECT/ENGINEER AFTER BEING AWARDED THE CONTRACT.

3. SUBMIT DETAILS OF ANY DESIRED DEPARTURES FROM THE CONTRACT DOCUMENTS AS MAY DEEMED NECESSARY, AND THE REASONS THEREFORE, WITHIN 15 DAYS AFTER AWARD OF THE CONTRACT. MAKE NO DEPARTURES WITH-OUT WRITTEN APPROVAL.

4. IF MENTION HAS BEEN OMITTED PERTAINING TO DETAILS, ITEMS OR RELATED ACCESSORIES REQUIRED FOR THE COMPLETION OF ANY ELECTRICAL, PLUMBING, HVAC, OR OTHER SYSTEM, INCLUDE SUCH ITEMS AND ACCESSORIES IN THE CONTRACT WITH-OUT ADDITIONAL CHARGE.

5. AFTER THE CONTRACT IS AWARDED, CLAIMS BASED ON INSUFFICIENT DATA OR INCORRECTLY ASSUMED CONDITIONS, OR CLAIMS BASED ON MISUNDERSTANDING THE NATURE OR CHARACTER OF THE WORK OR THE CONDITIONS UNDER WHICH IT MUST BE PERFORMED, WILL NOT BE RECOGNIZED.

6. THE CONTRACTOR SHALL NOT INTERPRET THIS PROJECT TO BE A "MINIMUM CODE DESIGN, OR AN "INDUSTRY STANDARD DESIGN". WHERE MATERIALS OR METHODS SHOWN ON THE DRAWINGS, OR SPECIFIC HEREIN, INDICATE A PREMIUM MATERIAL OR METHOD. THE CONTRACTOR IS EXPECTED TO PROVIDE SAME AND PROPOSED ALTERNATIVE METHODS OR MATERIALS AS A SIDE ITEM. EXCLUDES SUCH AS "IT MEETS NEC REQUIREMENTS" OR THIS IS THE INDUSTRY STANDARDS" WILL NOT BE RECOGNIZED AS JUSTIFICATION FOR ACCEPTANCE OF ITEMS NOT CONFORMING TO THE INTENDED DESIGN.

MIRRORS AND GLAZING

1. G.C. IS TO PROVIDE AND INSTALL ALL MIRRORS AND ALL MIRRORED SURFACES TO ENSURE THAT THE REFLECTION IS VISIBLY DISTORTION FREE.

2. UNLESS OTHERWISE NOTED, TYPICAL MIRRORS WILL BE FLAT EDGES WHERE THE CLEAN CUT "SQUARE" EDGE OF THE GLASS IS FLAT AND THE SURFACE EDGES ARE SLIGHTLY ARISSED. AFTER GRINDING THE ARISSES, EDGES SHALL BE POLISHED TO A HIGH GLOSS SURFACE WHERE THE SURFACE REFELECTIVITY IS SIMILAR IN APPEARANCE TO THE MAJOR SURFACE OF THE GLASS.

3. UNLESS OTHERWISE NOTED, BEVELED EDGE MIRRORS WILL BE MIRRORS WHERE THE SURFACE EDGE OF THE GLASS IS BEVELED TO A WIDTH AS INDICATED ON DETAIL DRAWINGS AND / OR SPECIFICATIONS. THE ANGLE FORMED BY THE INTERSECTION OF THE PLANCE OF THE BEVEL WITH THE MAJOR SURFACE FACE OF THE GLASS SHALL BE BETWEEN 3 TO 10 DEGREES. THE BEVELED SURFACE AND THE NOSE OF THE BEVEL SHALL BE POLISHED TO A HIGH GLOSS SURFACE WHERE THE SURFACE REFELECTIVITY IS SIMILAR IN APPEARANCE TO THE MAJOR SURFACE OF THE GLASS.

4. IMMEDIATELY AFTER CUTTING THE FINAL SIZES AND APPLYING THE EDGE TREATMENT, FACTORY SEAL ALL EDGES OF THE MIRRORS WITH EDGE SEALER TO PREVENT CHEMICAL OR ATMOSPHERIC PENETRATION OF THE GLASS / COATING.

5. THE G.C. SHALL ENSURE THAT THE ENDS OF THE BACK LIPS OF ALL J-CHANNELS SHALL BE FACTORY SNIPPED AND FILED SO AS NOT TO BE SEEN UPON INSTALLATION. EXPOSED EDGES AND CORNERS SHALL BE MADE SMOOTH TO THE TOUCH.

6. THE G.C SHALL ENSURE THAT ALL GLASS WITHIN PROJECT IS FULLY TEMPERED, UNLESS OTHERWISE NOTED. THE G.C SHALL ENSURE THAT ALL GLAZING FURNISH IS TO ABIDE BY FOLLOWING TABLE BELOW.

RECOMMENDED MINIMUM THICKNESS FOR FULLY TEMPERED GLASS	
GLAZING SPAN FROM TOP TO BOTTOM	RECOMMENDED MIN. THICKNESS
UP TO 1.5M (5FT)	6MM (¼")
OVER 1.5M (5FT) UP TO 2.4 M (8FT)	10MM (⅜")
OVER 2.4M (8FT) UP TO 3.0 M (10FT)	12MM (½")
OVER 3.0M (10FT) UP TO 3.6 M (12FT)	16MM (⅝")
OVER 3.6M (12FT) UP TO 4.2 M (14FT)	19MM (¾")
OVER 4.2M (14FT) UP TO 4.8 M (16FT)	22MM (⅞")
OVER 4.8M (16FT) UP TO 5.5 M (18FT)	25MM (1")
OVER 5.5M (18FT)	NOT RECOMMENDED

TABLE ABOVE IS TO BE USED AS A GUIDE ONLY. G.C SHALL CONSULTANT ALL GLASS THICKNESS WITH GLASS MANUFACTURE TO ENSURE THE GLASS DOES NOT TREMBLE OR SHIMMER. ALL DEFLECTIONS ARE TO BE WITHIN TOLERANCES NOTED BY NATIONAL AND LOCAL BUILDING CODE

LIMITING HEIGHTS FOR INTERIOR METAL STUD PARTITIONS

STUD DEPTH	FLANGE WIDTH	STUD GAUGE	STUD SPACING	MAXIMUM WALL HEIGHT OR MAXIMUM HEIGHT TO DIAGONAL BRACE
2 1/2"	1 5/8"	25	16"	10'-8"
2 1/2"	1 5/8"	25	24"	9'-6"
2 1/2"	1 5/8"	20	16"	12'-0"
2 1/2"	1 5/8"	20	24"	10'-6"
3 5/8"	1 5/8"	25	16"	14'-0"
3 5/8"	1 5/8"	25	24"	12'-3"
3 5/8"	1 5/8"	20	16"	15'-7"
3 5/8"	1 5/8"	20	24"	13'-8"
3 5/8"	1 5/8"	18	16"	16'-0"
3 5/8"	1 5/8"	16	16"	20'-6"
6"	1 5/8"	25	16"	20'-0"
6"	1 5/8"	25	24"	15'-0"
6"	1 5/8"	20	16"	22'-10"
6"	1 5/8"	20	16"	19'-11"
6"	1 5/8"	18	16"	23'-6"
6"	1 5/8"	16	16"	30'-0"

LODA
DESIGN

L.O.D.A inc.
1200 de Louvain Ouest, Montreal, Quebec, Canada H4N 1G5
(t) 514.382.0571 www.lodadesign.com

COPYRIGHT NOTICE
COPYRIGHT IN THESE DOCUMENTS BELONGS TO LODA INC. AND/OR RENE TRINGALI ARCHITECT. THESE DOCUMENTS MAY NOT BE FORWARDED TO OTHERS, TRANSMITTED, DOWNLOADED OR REPRODUCED IN ANY FORMAT, WHETHER PRINT OR ELECTRONIC WITHOUT THE EXPRESS, WRITTEN PERMISSION OF THE COPYRIGHT OWNER.

DISCLAIMER
USE OF THESE DOCUMENTS IS AT THE USER'S OWN RISK. THE USER SHALL INDEMNIFY AND SAVE HARMLESS LODA INC. AND THEIR EMPLOYEES, AGENTS AND CONSULTANTS FROM AND AGAINST ALL CLAIMS, LOSSES, DEMANDS, COSTS AND EXPENSES (INCLUDING LEGAL FEES), DAMAGES OR RECOVERIES (INCLUDING ANY AMOUNTS PAID IN SETTLEMENT) ARISING BY REASON OF, CAUSED, OR ALLEGED TO BE CAUSED, BY THE USER'S RELIANCE ON THESE DOCUMENTS.

No	DATE	REVISIONS	BY
-	24-11-2015	ISSUED FOR CONSTRUCTION	TW
-	24-11-2015	ISSUED FOR PERMIT	TW
-	17-11-2015	ISSUED TO CLIENT - FIRST SET	TW
-	17-11-2015	ISSUED TO LANDLORD - FOR APPROVAL	TW
-	17-11-2015	ISSUED TO ENGINEER - FINAL SET	TW
-	02-11-2015	ISSUED TO ENGINEER - FIRST SET	TW

BESTSELLER

225-A DE LIEGE OUEST
MONTREAL, QUEBEC, H2P 1H4

JOB
POLO PARK - CF
1455 PORTAGE AVENUE
WINNIPEG, MANITOBA, R3G 0W4
C.R.U. NO: 304 & 305

SHEET TITLE
GENERAL CONSTRUCTION NOTES

DRAWN BY	CHECKED	DATE	SHEET NO
TW	TI	OCT-2015	A-0.10
JOB No. BS1505		SCALE N/A	

SALES AREA

	SUPPLIED BY						INSTALLED BY						NOTES
	O	G	L	E	M	W	O	G	L	E	M	W	
GYPSUM BOARD CEILING		○						○					SEE A-1.20
WOOD PLANKING - WALLS						○		○					G.C. TO COORDINATE WITH WOOD SHOP FOR INSTALLATION
WOOD PLANKING - CEILING						○		○					G.C. TO COORDINATE WITH WOOD SHOP FOR INSTALLATION
WOOD BEAMS - LARGE						○		○					G.C. TO COORDINATE WITH WOOD SHOP FOR INSTALLATION
WOOD BEAMS - SMALL						○		○					G.C. TO COORDINATE WITH WOOD SHOP FOR INSTALLATION
CERAMIC FLOOR TILE	○	○						○					G.C. TO COORDINATE CLIENT AND TILE SUPPLIER
GROUT		○						○					
METAL BASEBOARDS		○			○			○					G.C. TO COORDINATE WITH METAL SHOP FOR ORDERS & INSTALLATION
WOOD WALL TRIMS		○				○		○					G.C. TO COORDINATE WITH WOOD SHOP FOR INSTALLATION
WALL FIXTURES - FIXED					○	○		○					G.C. TO COORDINATE WITH SUPPLIERS FOR INSTALLATION
FLOOR FIXTURES - MOVABLE					○	○	○	○					G.C. TO COORDINATE WITH SUPPLIERS FOR INSTALLATION
INTERACTIVE TV SCREENS	○							○					G.C. TO COORDINATE WITH SUPPLIER FOR INSTALLATION
INTERACTIVE TV SCREEN STRUCTURE	○							○					G.C. TO COORDINATE WITH SUPPLIER FOR INSTALLATION
MIRRORS		○			○	○		○					G.C. TO COORDINATE WOOD SHOP AS REQUIRED
GLASS DEMISING WALLS		○			○			○					G.C. TO COORDINATE METAL SHOP AS REQUIRED
CASH COUNTER						○		○					G.C. TO COORDINATE WITH WOOD SHOP FOR INSTALLATION
CASH COUNTER - ACCESSORIES	○						○						COORDINATE WITH CLIENT
CONCIERGE DESK						○		○					G.C. TO COORDINATE WITH WOOD SHOP FOR INSTALLATION
CONCIERGE DESK - ACCESSORIES	○						○						COORDINATE WITH CLIENT
BACKBAR						○		○					G.C. TO COORDINATE WITH WOOD SHOP FOR INSTALLATION
BACKBAR - ACCESSORIES	○						○						COORDINATE WITH CLIENT
WOOD FLOORING						○		○					G.C. TO COORDINATE WITH WOOD SHOP FOR INSTALLATION
LIGHT FIXTURES & LAMPS	○	○						○					COORDINATE WITH CLIENT & SUPPLIER
LED LIGHT FIXTURES	○	○						○					COORDINATE WITH CLIENT & SUPPLIER
GENERAL GLASS		○						○					
FLOORING FILL & PREP		○						○					
WALL BLOCKING		○						○					
FIXTURE HARDWARE / ACCESSORIES	○				○	○	○	○					G.C. TO COORDINATE METAL & WOOD SHOP AS REQUIRED
OUTLETS & CONNECTIONS		○						○					
TRENCHING		○						○					
CONCRETE WALL PANELS	○	○					○	○					COORDINATE WITH CLIENT & SUPPLIER
GLASS FILM POSTERS	○						○	○					COORDINATE WITH CLIENT
CARPETS	○						○						COORDINATE WITH CLIENT
SOUND SYSTEM	○						○	○					COORDINATE WITH CLIENT & SUPPLIER
ALARM SYSTEM	○						○	○					COORDINATE WITH CLIENT & SUPPLIER

MECHANICAL

MECHANICAL WORK - REFER TO MECHANICAL ENGINEER'S DRAWINGS		○						○					

ELECTRICAL

ELECTRICAL WORK - REFER TO ELECTRICAL ENGINEER'S DRAWINGS		○						○					

PLUMBING

PLUMBING WORK - REFER TO MECHANICAL ENGINEER'S DRAWINGS		○						○					

RESTROOM

	SUPPLIED BY						INSTALLED BY						NOTES
	O	G	L	E	M	W	O	G	L	E	M	W	
CEILING		○						○					SEE A-1.20
LIGHT FIXTURES & LAMPS	○	○						○					SEE A-1.21
VINYL FLOOR TILE		○						○					SEE A-1.30
BASEBOARDS		○						○					SEE A-1.30
PLUMBING FIXTURES		○						○					COORDINATE WITH MEP
MIRRORS		○						○					SEE A-4.50
GRAB BARS		○						○					SEE A-4.50
WASHROOM ACCESSORIES		○						○					SEE A-4.50
BARRIER FREE SIGNAGE		○						○					
OVERFLOW FLOOR DRAIN		○						○					COORDINATE WITH MEP

STOCKROOM

	SUPPLIED BY						INSTALLED BY						NOTES
	O	G	L	E	M	W	O	G	L	E	M	W	
OPEN CEILING				○				○		○			SEE A-1.20
LIGHT FIXTURES & LAMPS	○	○		○				○					COORDINATE WITH CLIENT & SUPPLIER
VINYL TILE FLOORING		○						○					
BASEBOARDS		○						○					
REAR SERVICE DOOR		○		○				○					COORDINATE WITH LANDLORD
REAR SERVICE DOOR HARDWARE		○		○				○					COORDINATE WITH LANDLORD
STOCKROOM SHELVING	○						○	○					COORDINATE WITH CLIENT & SUPPLIER
MICROWAVE	○						○						COORDINATE WITH CLIENT
FRIDGE	○						○						COORDINATE WITH CLIENT
MANAGERS DESK	○						○	○					COORDINATE WITH CLIENT & SUPPLIER
LOCKERS	○						○						COORDINATE WITH CLIENT
MANAGERS CHAIR	○						○						COORDINATE WITH CLIENT
AV RACK CABINET	○	○						○					COORDINATE WITH CLIENT
CENTRAL VACUUM UNIT		○						○					COORDINATE WITH MEP
BUZZER SYSTEM		○						○					
ALARM SYSTEM	○	○						○					COORDINATE WITH CLIENT & SUPPLIER
SOUND SYSTEM	○	○						○					COORDINATE WITH CLIENT & SUPPLIER

FITTING ROOMS

	SUPPLIED BY						INSTALLED BY						NOTES
	O	G	L	E	M	W	O	G	L	E	M	W	
WALLS & WALL SYSTEMS		○				○		○					G.C. TO COORDINATE WITH WOOD SHOP FOR INSTALLATION
BLOCKING		○						○					
CLOTHES HANGBAR					○			○					G.C. TO COORDINATE WITH METAL SHOP FOR ORDERS & INSTALLATION
CLOTHES HOOKS					○			○					G.C. TO COORDINATE WITH METAL SHOP FOR ORDERS & INSTALLATION
MOVABLE BENCH / STOOL	○						○	○					COORDINATE WITH CLIENT
FIXED BARRIER FREE BENCH						○		○					G.C. TO COORDINATE WITH WOOD SHOP FOR INSTALLATION
MIRRORS		○						○					
CURTAINS & ACCESSORIES	○	○					○	○					COORDINATE WITH CLIENT & SUPPLIER
GYPSUM BOARD CEILING		○						○					SEE A-1.20
LIGHT FIXTURES & LAMPS		○						○					COORDINATE WITH CLIENT & SUPPLIER
BARRIER FREE HANDBARS		○						○					

STOREFRONT

	SUPPLIED BY						INSTALLED BY						NOTES
	O	G	L	E	M	W	O	G	L	E	M	W	
DEMISING CAPS			○						○				COORDINATE WITH LANDLORD
STOREFRONT REVEAL		○						○					COORDINATE WITH LANDLORD
ADDITIONAL MALL FLOORING		○	○					○					COORDINATE WITH LANDLORD
STOREFRONT SIGNAGE		○						○					
STOREFRONT FLOOR SIGNAGE		○			○			○					G.C. TO COORDINATE WITH METAL SHOP FOR ORDERS & INSTALLATION
LIGHT FIXTURES & LAMPS	○	○						○					COORDINATE WITH CLIENT & SUPPLIER
LED LIGHT FIXTURES	○	○						○					COORDINATE WITH CLIENT & SUPPLIER
PLATFORMS					○	○		○					G.C. TO COORDINATE WITH WOOD SHOP FOR INSTALLATION
FIXTURES					○	○		○					G.C. TO COORDINATE WITH METAL SHOP FOR ORDERS & INSTALLATION
DOORS AND HARDWARE		○						○					
CLEAR TEMPERED GLASS		○						○					
GREY TEMPERED GLASS		○						○					
WINDOW FRAMING & STRUCTURE		○						○					
WINDOW DECORATIVE FRAME					○			○					G.C. TO COORDINATE WITH METAL SHOP FOR ORDERS & INSTALLATION
DECORATIVE CROWN MOLDING					○			○					G.C. TO COORDINATE WITH METAL SHOP FOR ORDERS & INSTALLATION
STOREFRONT METAL		○						○					
SIGN PERMIT		○						○					
SENSORMATIC	○	○					○	○					COORDINATE WITH CLIENT & SUPPLIER
GENERAL STRUCTURE		○						○					
REQUIRED BLOCKING		○						○					
CERAMIC TILES	○	○						○					G.C. TO COORDINATE CLIENT AND TILE SUPPLIER
GROUT		○						○					

DEMOLITION

	SUPPLIED BY						INSTALLED BY						NOTES
	O	G	L	E	M	W	O	G	L	E	M	W	
GENERAL DEMOLITION		○						○					COORDINATE WITH LANDLORD
BARRICADE & PAINTING		○						○					
BARRICADE GRAPHICS	○							○					COORDINATE WITH CLIENT
TEMPORARY POWER		○						○					COORDINATE WITH LANDLORD
TEMPORARY LIGHTING		○						○					COORDINATE WITH LANDLORD
DUMPSTER		○						○					COORDINATE WITH LANDLORD
REMOVAL OF EXITING BARRICADE		○						○					COORDINATE WITH LANDLORD
REMOVAL OF FINAL BARRICADE		○						○					COORDINATE WITH CLIENT

GENERAL

	SUPPLIED BY						INSTALLED BY						NOTES
	O	G	L	E	M	W	O	G	L	E	M	W	
DEMISING WALLS		○	○	○				○	○	○			RATING AS REQUIRED BY CODE
NEW WALL CONSTRUCTION		○						○					
GYPSUM BOARD		○						○					
SLAB		○		○				○		○			
FLOOR LEVELING		○						○					
INSULATION		○						○					
BLOCKING		○						○					
PLYWOOD		○						○					
GENERAL DOORS		○						○					SEE DOOR SCHEDULE
PAINT		○						○					
FIRE EXTINGUISHERS		○						○					COORDINATE WITH MEP
ACCESS PANELS		○						○					
ELECTRICAL PANELS		○						○					COORDINATE WITH MEP
STRUCTURAL ELEMENTS		○						○					

RESPONSIBILITY SCHEDULE

ANNOTATIONS: O: OWNER G: GENERAL CONTRACTOR L: LANDLORD E: EXISTING M: METAL SHOP W: WOOD SHOP / MILLWORK SHOP

COPYRIGHT NOTICE

COPYRIGHT IN THESE DOCUMENTS BELONGS TO LODA INC. AND/OR RENE TRINGALI ARCHITECT. THESE DOCUMENTS MAY NOT BE FORWARDED TO OTHERS, TRANSMITTED, DOWNLOADED OR REPRODUCED IN ANY FORMAT, WHETHER PRINT OR ELECTRONIC WITHOUT THE EXPRESS, WRITTEN PERMISSION OF THE COPYRIGHT OWNER.

DISCLAIMER

USE OF THESE DOCUMENTS IS AT THE USER'S OWN RISK. THE USER SHALL INDEMNIFY AND SAVE HARMLESS LODA INC. AND THEIR CONSULTANTS FROM ANY AND ALL CLAIMS, ACTIONS, SUITS, LEGAL CLAIMS, LOSSES, DEMANDS, COSTS AND EXPENSES (INCLUDING LEGAL FEES), DAMAGES OR RECOVERIES (INCLUDING ANY AMOUNTS PAID IN SETTLEMENT) ARISING BY REASON OF, CAUSED, OR ALLEGED TO BE CAUSED, BY THE USER'S RELIANCE ON THESE DOCUMENTS.

LODA DESIGN

L.O.D.A inc.
1200 de Louvain Ouest, Montreal, Quebec, Canada H4N 1G5
(t) 514.382.0571 www.lodadesign.com

No	DATE	REVISIONS	BY
-	24-11-2015	ISSUED FOR CONSTRUCTION	TW
-	24-11-2015	ISSUED FOR PERMIT	TW
-	17-11-2015	ISSUED TO CLIENT - FIRST SET	TW
-	17-11-2015	ISSUED TO LANDLORD - FOR APPROVAL	TW
-	17-11-2015	ISSUED TO ENGINEER - FINAL SET	TW
-	02-11-2015	ISSUED TO ENGINEER - FIRST SET	TW

BESTSELLER

225-A DE LIEGE OUEST
MONTREAL, QUEBEC, H2P 1H4

JOB: POLO PARK - OF
1455 PORTAGE AVENUE
WINNIPEG, MANITOBA, R3G 0W4
CRU NO: 304 & 305

SHEET TITLE: RESPONSIBILITY SCHEDULE

DRAWN BY	CHECKED	DATE	SHEET NO
TW	TI	OCT-2015	A-0.20
JOB No. BS1505		SCALE NO SCALE	

Filename: I:\Projects\BestSeller\Bestseller_Dept_Store\BS1505_Polo Park\3- CD\A-Current\BS1505-A020.dwg Plotted: 11/25/2015 9:53 AM Plotted by: Mario Muccino

KEY NOTES - DEMOLITION PLAN

- SEE BELOW FOR PHOTOS OF EXISTING STORES
- FOR ELECTRICAL AND MECHANICAL LEGEND SEE PAGE A-6.00
- G.C. TO DEMOLISH ALL EXISTING WALLS UNLESS OTHERWISE NOTED
- G.C. MUST ENSURE TO MAINTAIN THE STRUCTURAL INTEGRITY OF ALL COLUMNS AND STRUCTURAL WALLS. COORDINATE WITH THE LANDLORD
- G.C. MUST PREPARE ALL EXISTING DEMISING WALLS TO RECEIVE A NEW FINISH
- G.C. TO DEMOLISH ALL EXISTING CEILINGS AND LIGHTING FIXTURES UNLESS OTHERWISE NOTED
- G.C. TO REPAIR ANY DAMAGED SURFACES PRIOR TO BEGINING NEW CONSTRUCTION.

EXISTING WALL TO KEEP

EXISTING WALL TO KEEP

EXISTING WALL TO DEMOLISH

1. G.C. TO KEEP/ REUSE ANY FUNCTIONING ELECTRICAL POWER OUTLETS WITHIN THE STOCKROOM AREA. COORDINATE AS REQUIRED.
2. G.C. TO REMOVE AND DISCARD EXISTING CARPET FLOOR TILES THROUGHOUT THE UNIT. G.C. TO PREPARE THE SLAB UNDERNEATH TO RECEIVE THE NEW FINISH
3. ALL EXISTING STOCKROOM LIGHT FIXTURES TO BE RELOCATED AND RELISED. COORDINATE WITH PAGE A-1.21. G.C. TO RE-LAMP AS NECESSARY.
4. FULL HEIGHT STOREFRONT GLAZING TO BE REMOVED AND DISCARDED. G.C. TO USE PRECAUTION WHEN REMOVING GLAZING PANELS.
5. EXISTING STOREFRONT GYPSUM BOARD BULKHEAD TO BE DEMOLISHED. HEIGHTS AND FINISHES VARY.
6. EXISTING EXIT SIGN TO BE REUSED. G.C. TO COORDINATE WITH ENGINEERS DRAWINGS AND ENSURE EXIT SIGN MEETS LOCAL BUILDING AND CONSTRUCTION CODE REQUIREMENTS
7. EXISTING ELECTRICAL PANELS & GROUND MOUNTED TRANSFORMER. G.C. TO REMOVE AND RELOCATE AS NECESSARY. COORDINATE WITH ENGINEERS DRAWINGS
8. EXISTING RETAIL AREA TRACK LIGHTS & LIGHTING TO BE DEMOLISHED. G.C. TO PROPERLY DISPOSE & RECYCLE ALL ELECTRICAL ELEMENTS.
9. EXISTING RETAIL AREA FLUORESCENT LIGHTS TO BE DEMOLISHED. G.C. TO PROPERLY DISPOSE & RECYCLE ALL ELECTRICAL ELEMENTS.
10. EXISTING LOCATION OF LIGHT SWITCHES TO BE RELOCATED / DEMOLISHED AS REQUIRED.
11. EXISTING FIRE EXTINGUISHER CABINET TO BE RELOCATED. COORDINATE WITH MALL & DESIGNER FOR NEW PLACEMENT OF FIRE HOSE CABINET.

EXISTING PHOTOS - CURRENT CONDITIONS

A IMAGE

B IMAGE

C IMAGE

D IMAGE

E IMAGE

F IMAGE

G IMAGE

H IMAGE

J IMAGE

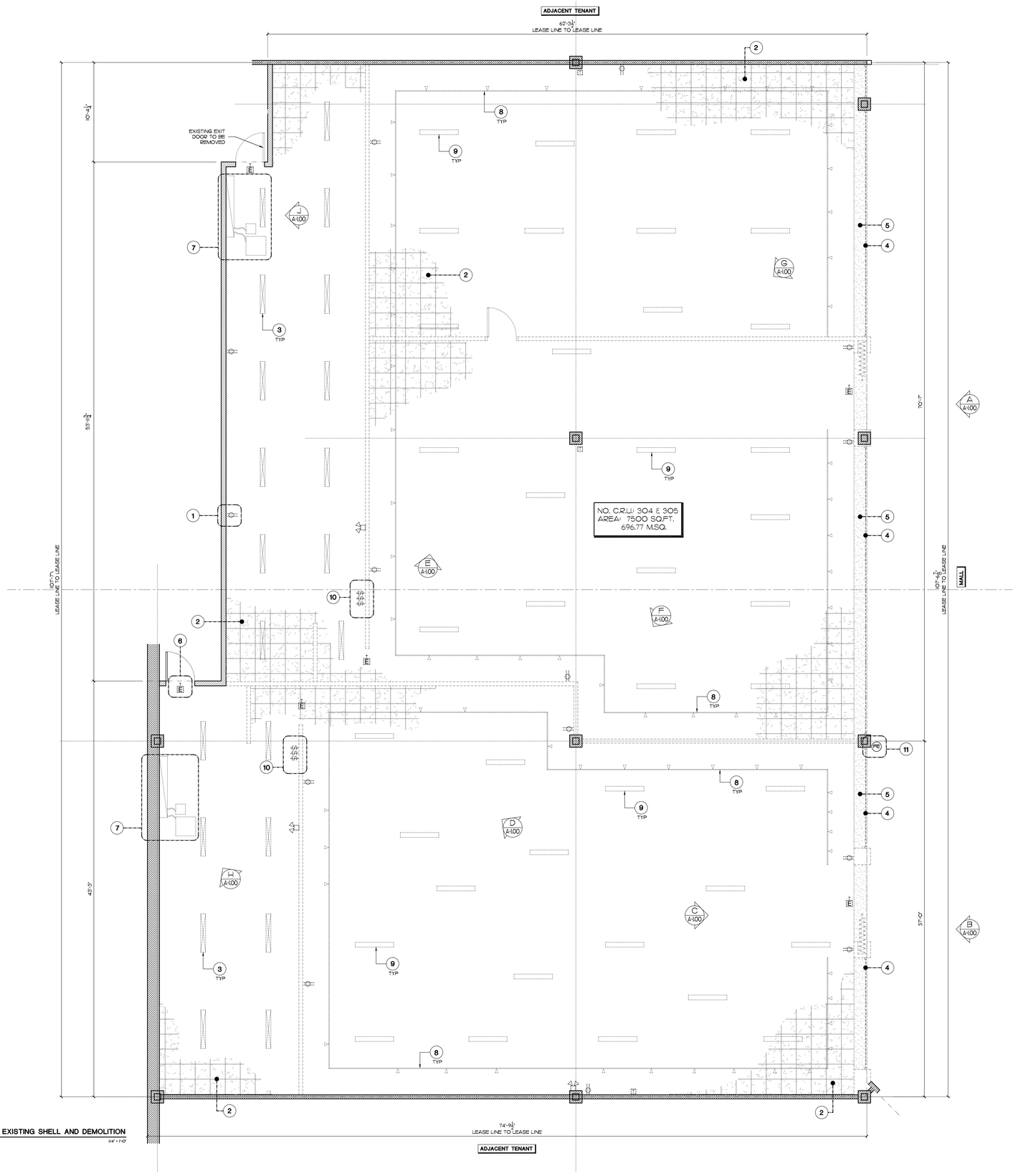

1 A-1.00 PLAN - EXISTING SHELL AND DEMOLITION
1/4" = 1'-0"

COPYRIGHT NOTICE

COPYRIGHT IN THESE DOCUMENTS BELONGS TO LODA INC. AND/OR RENE TRINGALI ARCHITECT. THESE DOCUMENTS MAY NOT BE FORWARDED TO OTHERS, TRANSMITTED, DOWNLOADED OR REPRODUCED IN ANY FORMAT, WHETHER PRINT OR ELECTRONIC WITHOUT THE EXPRESS, WRITTEN PERMISSION OF THE COPYRIGHT OWNER.

DISCLAIMER

USE OF THESE DOCUMENTS IS AT THE USER'S OWN RISK. THE USER SHALL INDEMNIFY AND SAVE HARMLESS LODA INC. AND THEIR SUPPLIERS, AGENTS, EMPLOYEES, OFFICERS AND DIRECTORS FROM ALL CLAIMS, LOSSES, DEMANDS, COSTS AND EXPENSES (INCLUDING LEGAL FEES), DAMAGES OR RECOVERIES (INCLUDING ANY AMOUNTS PAID IN SETTLEMENT) ARISING BY REASON OF, CAUSED, OR ALLEGED TO BE CAUSED, BY THE USER'S RELIANCE ON THESE DOCUMENTS.

LODA DESIGN

L.O.D.A inc.
1200 de Louvain Ouest, Montreal, Quebec, Canada H4N 1G5
(t) 514.382.0571 www.lodadesign.com

No	DATE	REVISIONS	BY
-	24-11-2015	ISSUED FOR CONSTRUCTION	TW
-	24-11-2015	ISSUED FOR PERMIT	TW
-	17-11-2015	ISSUED TO CLIENT - FIRST SET	TW
-	17-11-2015	ISSUED TO LANDLORD - FOR APPROVAL	TW
-	17-11-2015	ISSUED TO ENGINEER - FINAL SET	TW
-	02-11-2015	ISSUED TO ENGINEER - FIRST SET	TW

BESTSELLER

225-A DE LIEGE OUEST
MONTREAL, QUEBEC, H2P 1H4

JOB
POLO PARK - CF
1455 PORTAGE AVENUE
WINNIPEG, MANITOBA, R3G 0W4
C.R.U. NO.: 304 & 305

SHEET TITLE
EXISTING SHELL PLAN / DEMOLITION PLAN

DRAWN BY	CHECKED	DATE	SHEET NO
TW	TI	OCT-2015	A-1.00
JOB No. BS1505		SCALE 1/4"=1'-0"	

Filename: I:\Projects\BestSeller\Bestseller_Dept_Store\BS1505_Polo Park\3- CD\A-Current\BS1505-A100.dwg Plotted: 11/25/2015 9:54 AM Plotted by: Mario Muccino

KEY NOTES - CONSTRUCTION PLAN

- COORDINATE ALL CORNER AND CONSTRUCTION DETAILS WITH REFERENCES PROVIDED. G.C. TO ADVISE DESIGNER OF ANY DISCREPANCIES WITHIN THE DRAWINGS.
- G.C. TO INSTALL METAL CORNER GUARDS ON ANY EXPOSED GYPSUM CORNERS - ADVISE DESIGNER PRIOR TO INSTALLATION.
- FOR WALL & DOOR LEGEND SEE PAGE A-6.01

1. A/A-4.40 B/A-4.40 COORDINATE ALL FITTING ROOM PARTITIONS WITH SHOP DRAWINGS AND DETAILS
2. COORDINATE GLASS PARTITIONS WITH SHOP DRAWINGS AND ELEVATIONS ON PAGE A-2.10 & A-2.11 .
3. COORDINATE CONSTRUCTION AND INSTALLATION OF THE INTERACTIVE TV SCREEN WITH AXIS4 MEDIA CONTACT INFO ON COVER PAGE
4. COORDINATE PLACEMENT OF STRUCTURAL SUPPORT FOR FIXTURE WITH SHOP DRAWINGS AND MILLWORK DRAWINGS

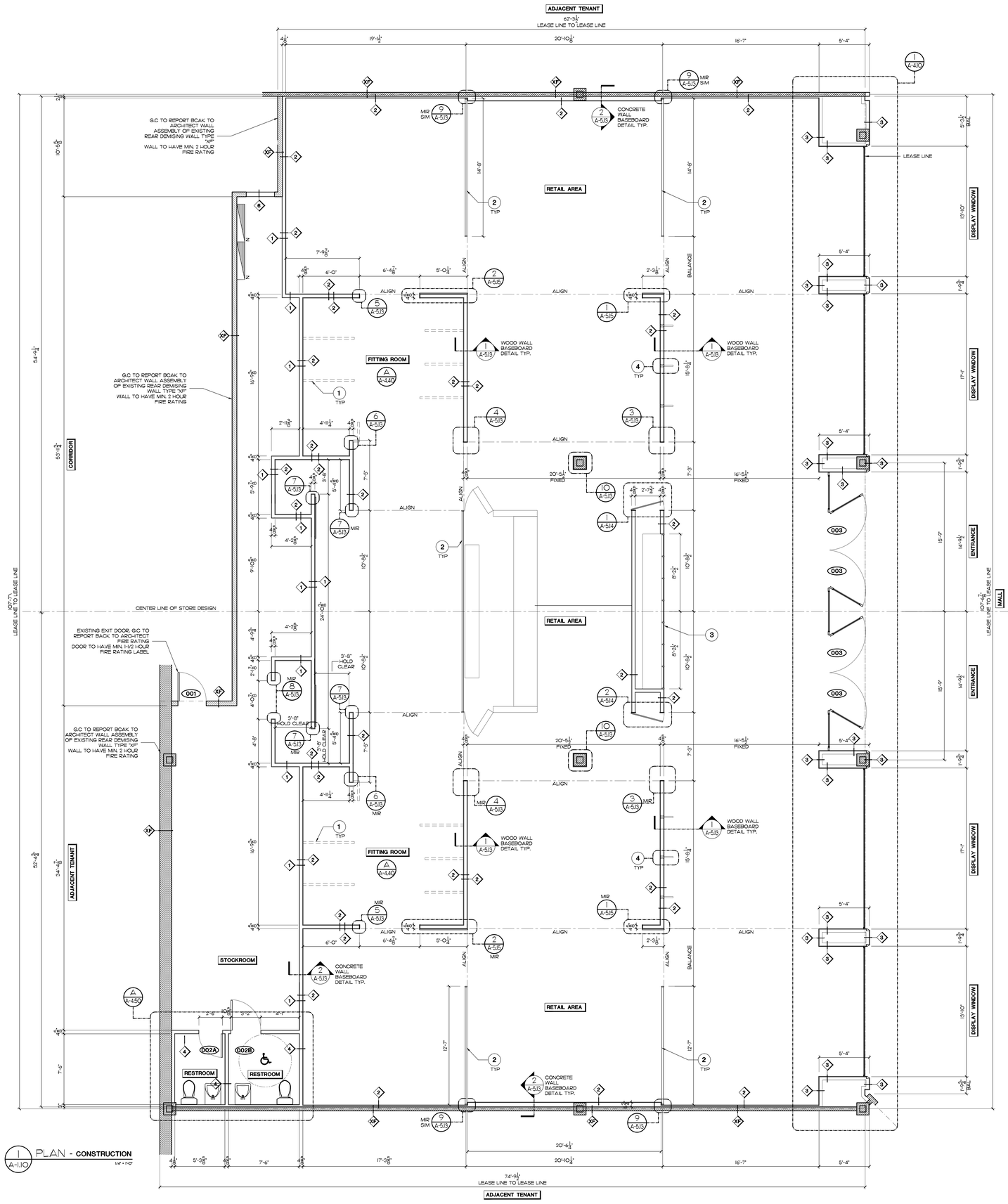

1 A-1.10 PLAN - CONSTRUCTION 1/4" = 1'-0"

LODA DESIGN
L.O.D.A inc.
1200 de Louvain Ouest, Montreal, Quebec, Canada H4N 1G5
(1) 514.382.0571 www.lodadesign.com

COPYRIGHT NOTICE

COPYRIGHT IN THESE DOCUMENTS BELONGS TO LODA INC. AND/OR RENE TRINGALI ARCHITECT. THESE DOCUMENTS MAY NOT BE FORWARDED TO OTHERS, TRANSMITTED, DOWNLOADED OR REPRODUCED IN ANY FORMAT, WHETHER PRINT OR ELECTRONIC WITHOUT THE EXPRESS, WRITTEN PERMISSION OF THE COPYRIGHT OWNER.

DISCLAIMER

USE OF THESE DOCUMENTS IS AT THE USER'S OWN RISK. THE USER AGREES TO INDEMNIFY AND HOLD HARMLESS THE AUTHOR, ITS EMPLOYEES, AGENTS AND CONSULTANTS FROM AND AGAINST ALL CLAIMS, LOSSES, DEMANDS, COSTS AND EXPENSES (INCLUDING LEGAL FEES), DAMAGES OR RECOVERIES (INCLUDING ANY AMOUNTS PAID IN SETTLEMENT) ARISING BY REASON OF, CAUSED, OR ALLEGED TO BE CAUSED, BY THE USER'S RELIANCE ON THESE DOCUMENTS.

No	DATE	REVISIONS	BY
-	24-11-2015	ISSUED FOR CONSTRUCTION	TW
-	24-11-2015	ISSUED FOR PERMIT	TW
-	17-11-2015	ISSUED TO CLIENT - FIRST SET	TW
-	17-11-2015	ISSUED TO LANDLORD - FOR APPROVAL	TW
-	17-11-2015	ISSUED TO ENGINEER - FINAL SET	TW
-	02-11-2015	ISSUED TO ENGINEER - FIRST SET	TW

BESTSELLER

225-A DE LIEGE OUEST
MONTREAL, QUEBEC, H2P 1H4

JOB
POLO PARK - CF
1485 PORTAGE AVENUE
WINNIPEG, MANITOBA, R3G 0W4
C.R.U. NO: 204 & 205

SHEET TITLE
CONSTRUCTION PLAN

DRAWN BY	CHECKED	DATE	SHEET NO
TW	TI	OCT-2015	A-1.10
JOB No. BS1505		SCALE 1/4"=1'-0"	

Filename: I:\Projects\BestSeller\Bestseller_Dept_Store\BS1505_Polo Park\3- CD\A-Current\BS1505-A110.dwg Plotted: 11/25/2015 9:54 AM Plotted by: Mario Muccino

KEY NOTES - POWER PLAN

- COORDINATE ALL SECURITY SYSTEM ELEMENTS WITH DRAWINGS PROVIDED BY SECURITY COMPANY. G.C. IS RESPONSIBLE TO ADVISE DESIGNER OF ANY DISCREPANCIES BETWEEN THE TWO DRAWINGS.
- ALARM KEYPADS, MOTION SENSORS AND DOOR SENSORS MUST MATCH THE WALL/CEILING FINISH. G.C. TO COORDINATE WITH SECURITY SYSTEM SUPPLIER TO ENSURE PROPER INTEGRATION WITH THE DESIGN.
- ALL STEAMER POWER OUTLETS SHOULD BE CLEARLY INDICATED UPON INSTALLATION. METHOD OF CLARIFICATION TO BE PROPOSED BY THE G.C. AND APPROVED BY THE DESIGNER.
- G.C. TO COORDINATE PLACEMENT OF CENTRAL VACUUM AND VAC OUTLETS. ENSURE ALL OUTLETS ARE FINISHED TO MATCH ADJACENT WALL FINISH.
- G.C. TO COORDINATE PLACEMENT OF ALL FLOOR INTEGRATED OUTLETS WITH ENGINEERS DRAWINGS. CORE DRILL / TRENCH AS REQUIRED. ADVISE DESIGNER OF ANY ELEMENTS DISCOVERED DURING SCANNING WHICH APPEAR TO CAUSE PROBLEMS.
- G.C. TO KEEP/ RELISE ANY FUNCTIONING ELECTRICAL POWER OUTLETS WITHIN THE STOCKROOM AREA. COORDINATE AS REQUIRED.
- FOR ELECTRICAL AND MECHANICAL LEGEND SEE PAGE A-6.00

1. STOCKROOM - COORDINATE ALL PLACEMENT OF ELECTRICAL OUTLETS WITH ENGINEERS DRAWINGS AS WELL AS THE STORAGE DRAWINGS. G.C. TO COORDINATE EXACT PLACEMENT AND HEIGHTS OF ALL OUTLETS AND PLUGS WITH CLIENT. G.C. TO ENSURE ALL ELEMENTS ARE PROPERLY INTEGRATED INTO THE WORKSPACE
2. SECURITY - G.C. TO COORDINATE ALL PLACEMENT OF SECURITY AND SENSORMATIC SYSTEM WITH ENGINEERS DRAWINGS AS WELL AS THE SECURITY SET OF DRAWINGS
   COMPANY : TYCO
   CONTACT: GREG PYNN
   GPYNN@TYCO.CA
3. INTERACTIVE SCREEN - COORDINATE ALL ELEMENTS NEEDED FOR THE INTERACTIVE SCREEN WITH SCREEN SUPPLIER
   COMPANY : AXIS4 MEDIA
   CONTACT : CHARLES DALLAIRE
   CD@AXIS4MEDIA.CA
4. CASH - COORDINATE ALL LOCATIONS & PLACEMENTS OF ELECTRICAL AND TECHNICAL ELEMENTS WITH THE CASH DETAIL DRAWINGS. CORE DRILL / TRENCH AS REQUIRED
5. CONCIERGE DESK - COORDINATE ALL LOCATIONS & PLACEMENTS OF ELECTRICAL AND TECHNICAL ELEMENTS WITH THE CONCIERGE DESK DETAIL DRAWINGS. CORE DRILL / TRENCH AS REQUIRED
6. G.C. TO COORDINATE PLACEMENT OF JUNCTION BOXES WITH FIXTURE SUPPLIER. COORDINATE WITH ENGINEERS DRAWINGS. G.C. IS RESPONSIBLE TO ADVISE DESIGNER OF ANY DISCREPANCIES BETWEEN THE TWO DRAWINGS.
7. STOCKROOM WALL FOR LOCATION OF ALL LIGHT SWITCHES. ENGINEER TO CLEARLY LABEL EACH FIXTURE AND ENSURE ALL FIXTURES ARE ON PROPER CIRCUITS
8. G.C. TO ENSURE TRAFFIC COUNTER IS INSTALLED SEAMLESSLY INTO THE CEILING ABOVE. ALL WIRES AND ELEMENTS SHOULD BE HIDDEN / MUST MATCH THE CEILING FINISH.
9. RECESSED FLOOR POWER OUTLETS SHOULD BE FLUSH WITH THE FLOOR FINISH. G.C. TO ENSURE NO EDGES ARE RAISED OR UNEVEN.
10. G.C. TO COORDINATE PLACEMENT OF TWO SENSORMATIC BOXES WITH SECURITY COMPANY. BOXES MUST ACCESSIBLE AND BE PLACED WITHIN 20"-0" OF THE SENSORMATIC SYSTEM. COORDINATE WITH SECURITY COMPANY FOR POWER REQUIREMENTS
11. SPECIFIED JUNCTION BOXES IN LOCATIONS WHERE WALLS ARE ABSENT NEED TO BE TRENCHED AND INTEGRATED INTO THE FLOOR.

WALL FIXTURE LED - LOCATIONS

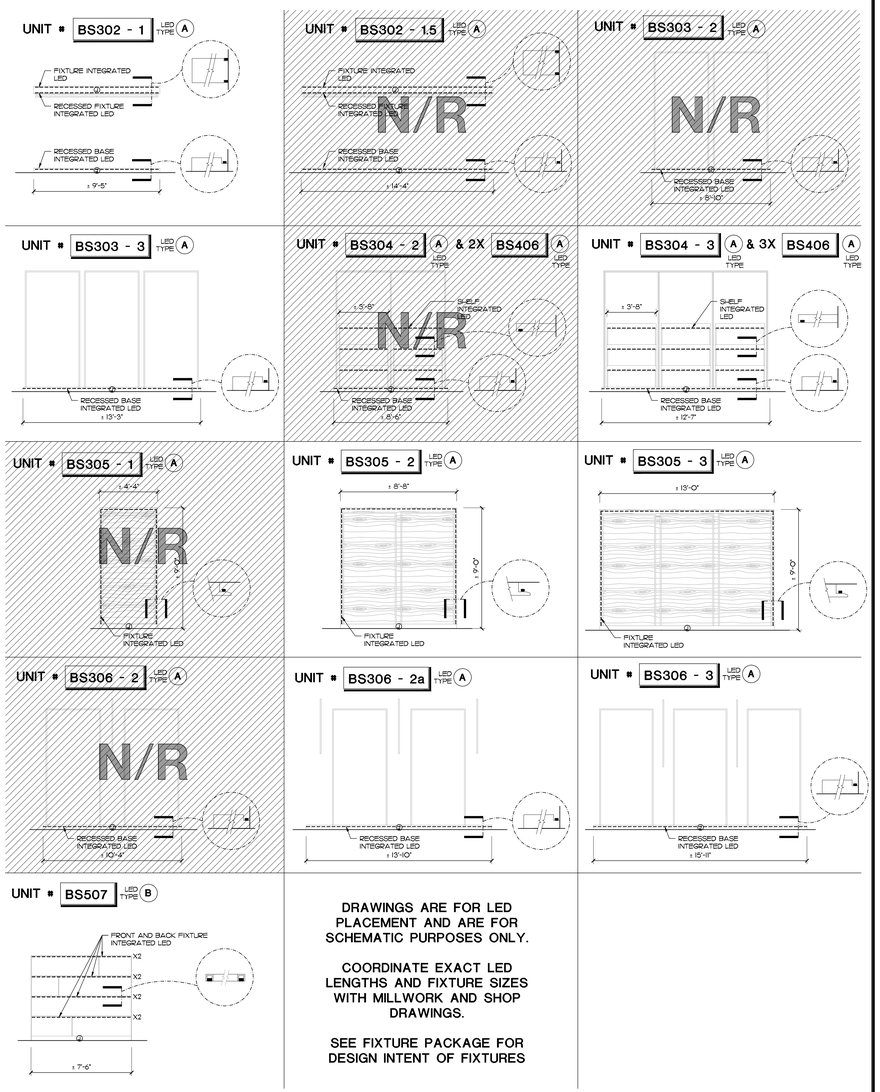

DRAWINGS ARE FOR LED PLACEMENT AND ARE FOR SCHEMATIC PURPOSES ONLY.

COORDINATE EXACT LED LENGTHS AND FIXTURE SIZES WITH MILLWORK AND SHOP DRAWINGS.

SEE FIXTURE PACKAGE FOR DESIGN INTENT OF FIXTURES

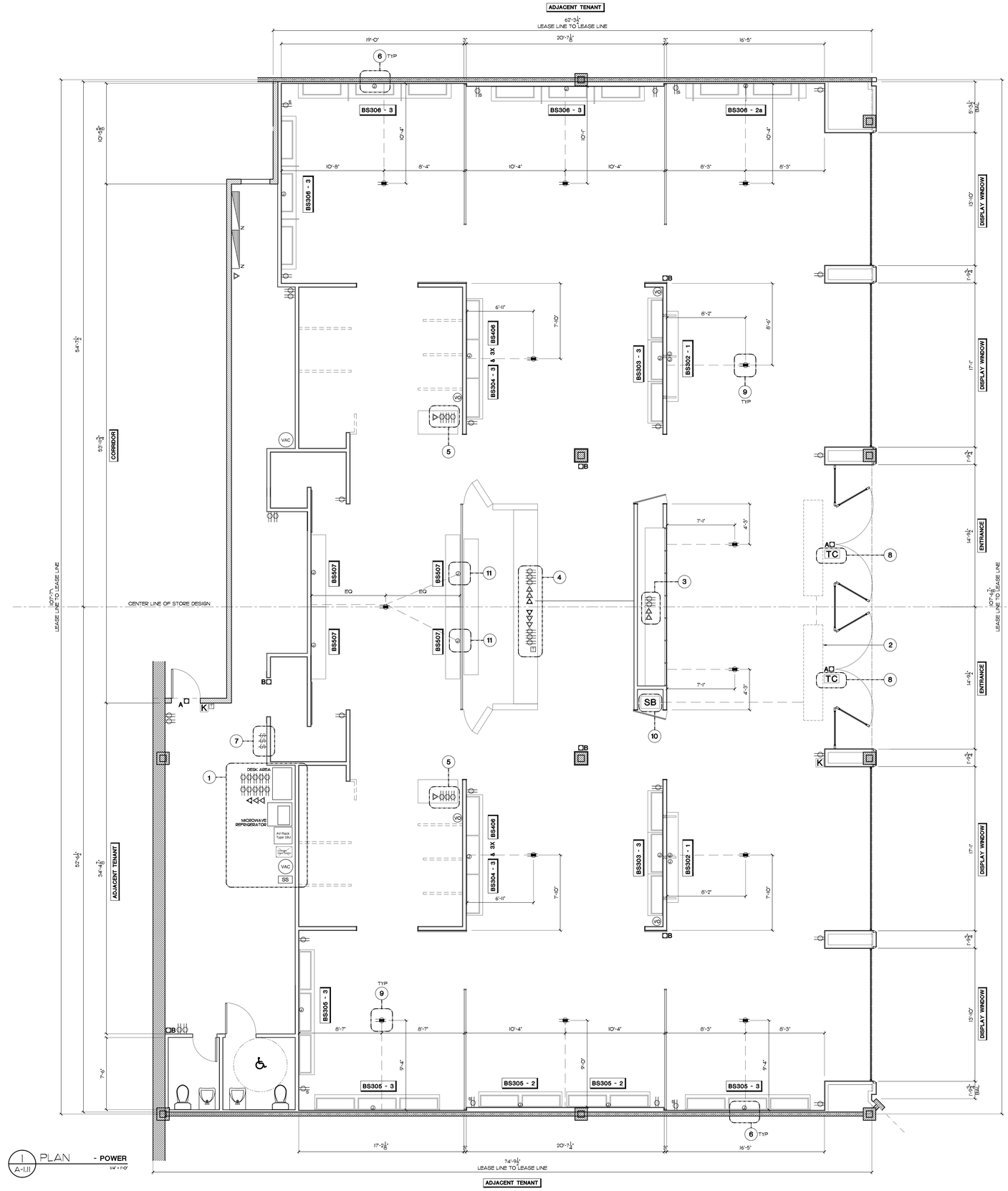

1 A-1.11 PLAN - POWER 1/4" = 1'-0"

COPYRIGHT NOTICE

COPYRIGHT IN THESE DOCUMENTS BELONGS TO LODA INC. AND/OR RENE TRINCALI ARCHITECT. THESE DOCUMENTS MAY NOT BE FORWARDED TO OTHERS, TRANSMITTED, DOWNLOADED OR REPRODUCED IN ANY FORMAT, WHETHER PRINT OR ELECTRONIC WITHOUT THE EXPRESS, WRITTEN PERMISSION OF THE COPYRIGHT OWNER.

DISCLAIMER

USE OF THESE DOCUMENTS IS AT THE USER'S OWN RISK. THE USER AGREES TO INDEMNIFY AND HOLD HARMLESS THE ARCHITECT, HIS EMPLOYEES, AGENTS AND CONSULTANTS FROM AND AGAINST ALL CLAIMS, LOSSES, DEMANDS, COSTS AND EXPENSES (INCLUDING LEGAL FEES), DAMAGES OR RECOVERIES (INCLUDING ANY AMOUNTS PAID IN SETTLEMENT) ARISING BY REASON OF, CAUSED, OR ALLEGED TO BE CAUSED, BY THE USER'S RELIANCE ON THESE DOCUMENTS.

LODA DESIGN
L.O.D.A inc.
1200 de Louvain Ouest, Montreal, Quebec, Canada H4N 1G5
(t) 514.382.0571 www.lodadesign.com

No	DATE	REVISIONS	BY
-	24-11-2015	ISSUED FOR CONSTRUCTION	TW
-	24-11-2015	ISSUED FOR PERMIT	TW
-	17-11-2015	ISSUED TO CLIENT - FIRST SET	TW
-	17-11-2015	ISSUED TO LANDLORD - FOR APPROVAL	TW
-	17-11-2015	ISSUED TO ENGINEER - FINAL SET	TW
-	02-11-2015	ISSUED TO ENGINEER - FIRST SET	TW

BESTSELLER

225-A DE LIEGE OUEST
MONTREAL, QUEBEC, H2P 1H4

JOB
POLO PARK - CF
1485 PORTAGE AVENUE
WINNIPEG, MANITOBA, R3G 0W4
C.R.U. NO: 204 & 205

SHEET TITLE
POWER PLAN

DRAWN BY	CHECKED	DATE	SHEET NO
TW	TI	OCT-2015	A-1.11
JOB No. BS1505		SCALE 1/4"=1'-0"	

KEY NOTES - CEILING PLAN

- ALL CEILING HEIGHTS ARE GIVEN TO UNDERSIDE OF APPLIED FINISH
- ENSURE ALL CEILING INTEGRATED ELEMENTS MATCH THE COLOR AND FINISH OF THE CEILING. THIS INCLUDES BUT IS NOT LIMITED TO, SPRINKLERS, EXIT SIGNS AND HVAC GRILLS, ACCESS PANELS, ETC...
- FOR ALL CEILING TRANSITION DETAILS, REFER TO DETAIL REFERENCE PROVIDED.
- G.C. TO COORDINATE PLACEMENT OF ALL MECHANICAL ELEMENTS WITH ENGINEERS DRAWINGS. G.C. IS RESPONSIBLE TO ADVISE DESIGNER OF ANY DISCREPANCIES BETWEEN THE TWO DRAWINGS.
- FOR FINISH LEGEND SEE PAGE A-6.01

1. G.C. TO INSTALL ADEQUATE BLOCKING WITHIN CEILING ABOVE SUSPENDED FIXTURES. ADJUST SIZES AND THICKNESS AS REQUIRED. COORDINATE EXACT AMOUNT OF BLOCKING WITH MILLWORK AND METAL SHOP DRAWINGS
2. ALL RECESSED LIGHT FIXTURES TO BE LOOSE. EXACT POSITION TO BE ALIGNED AND CUT DURING CEILING PLANK INSTALLATION. LIGHT FIXTURE SIZES TO BE CONFIRMED ON SITE. ALL EXPOSED EDGES OF CUT WOOD PLANKING TO BE PAINTED TO MATCH
3. VISIBLE CEILING BETWEEN PLANKING TO BE PAINTED (P4)
4. FOR INSTALLATION OF WOOD BEAMS REFER TO MILLWORK DRAWINGS. G.C. TO ENSURE ADEQUATE BLOCKING IS PROVIDED. UNDERSIDE OF WOOD BEAMS SHOULD BE AT 9'-11" AS PER PLANS
5. LED STRIP LIGHTING , REFER TO LIGHTING LEGEND FOR SPECIFICATIONS. COORDINATE LOCATIONS AND QUANTITY OF TRANSFORMERS WITH LIGHTING CONSULTANT & ENGINEER.
6. STOCKROOM OPEN CEILING TO BE PAINTED (P4). ALL EXPOSED ELEMENTS INCLUDING METAL DECK, HVAC, AND JOISTS TO BE PAINTED TO MATCH
7. 1 / A-5.16 — CEILING PLAN REPRESENTS A SCHEMATIC WOOD PLANKING PATTERN. FOR ACTUAL WOOD PLANKING PLACEMENT & INSTALLATION PLEASE REFER TO PLANKING INSTALLATION DETAILS.
8. 1 / A-5.17 — CEILING PLAN REPRESENTS A SCHEMATIC WOOD PLANKING PATTERN. FOR ACTUAL WOOD PLANKING PLACEMENT & INSTALLATION PLEASE REFER TO PLANKING INSTALLATION DETAILS.

SCHEMATIC STORE SECTIONS - CEILING

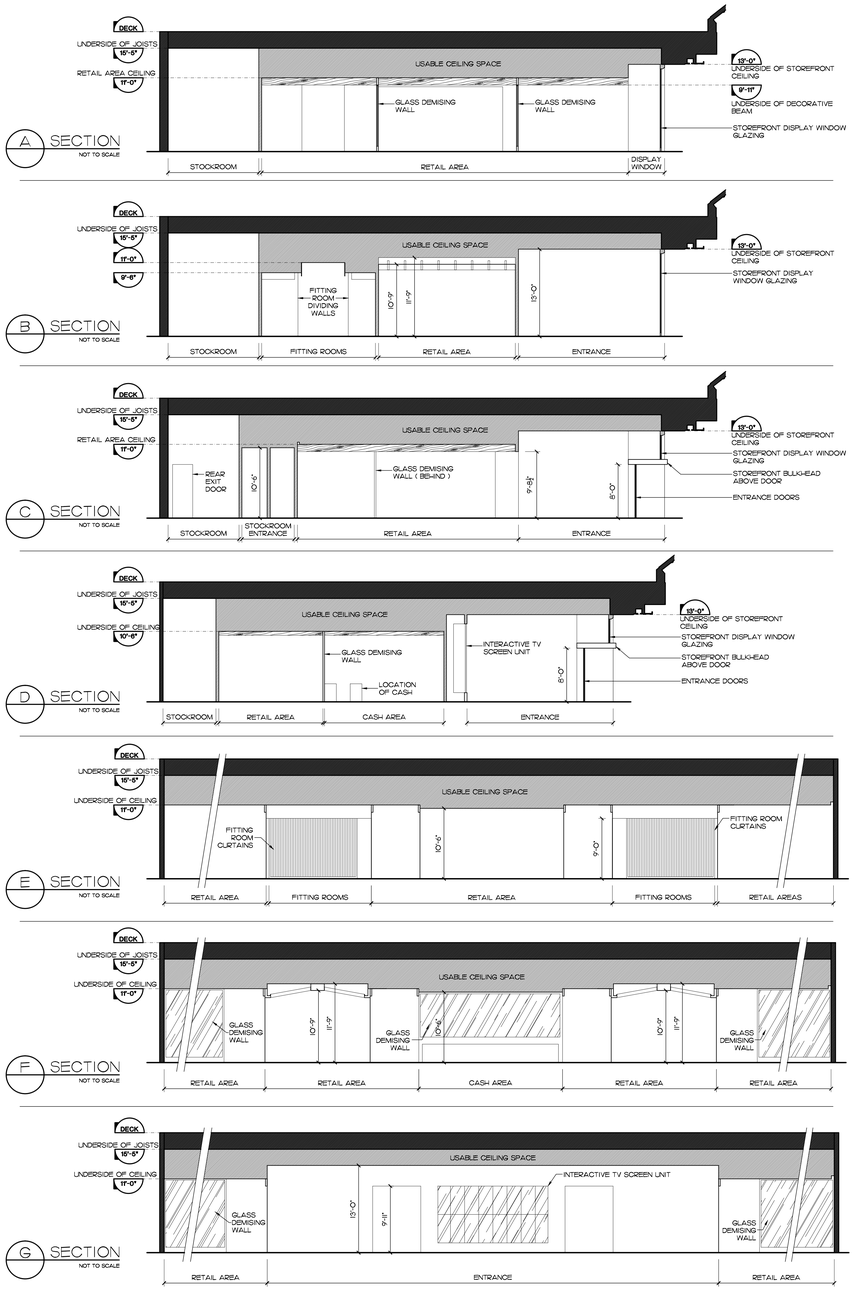

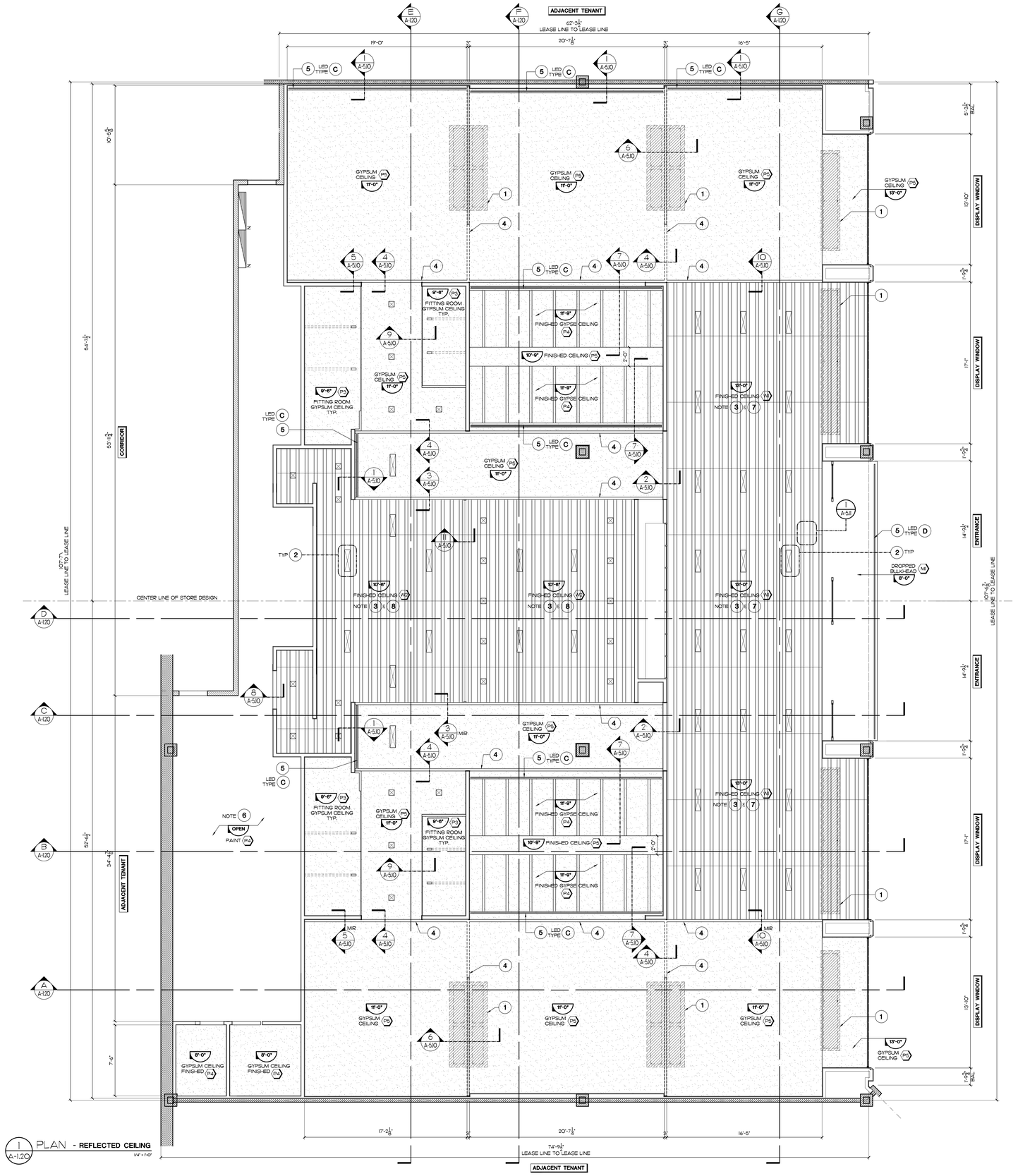

1 / A-1.20 PLAN - REFLECTED CEILING
1/4" = 1'-0"

COPYRIGHT NOTICE

COPYRIGHT IN THESE DOCUMENTS BELONGS TO LODA INC. AND/OR RENE TRINGALI ARCHITECT. THESE DOCUMENTS MAY NOT BE FORWARDED OR REPRODUCED IN ANY FORMAT. IF REPRODUCED IN ANY FORMAT, WHETHER PRINT OR ELECTRONIC WITHOUT THE EXPRESS, WRITTEN PERMISSION OF THE COPYRIGHT OWNER.

DISCLAIMER

USE OF THESE DOCUMENTS IS AT THE USER'S OWN RISK. THE USER SHALL INDEMNIFY AND SAVE HARMLESS LODA INC., AND THEIR EMPLOYEES, AGENTS AND CONSULTANTS FROM AND AGAINST ALL CLAIMS, LOSSES, DEMANDS, COSTS AND EXPENSES (INCLUDING LEGAL FEES), DAMAGES OR RECOVERIES (INCLUDING ANY AMOUNTS PAID IN SETTLEMENT) ARISING BY REASON OF, CAUSED, OR ALLEGED TO BE CAUSED, BY THE USER'S RELIANCE ON THESE DOCUMENTS.

LODA DESIGN

L.O.D.A inc.
1200 de Louvain Ouest, Montreal, Quebec, Canada H4N 1G5
(t) 514.382.0571 www.lodadesign.com

No	DATE	REVISIONS	BY
-	24-11-2015	ISSUED FOR CONSTRUCTION	TW
-	24-11-2015	ISSUED FOR PERMIT	TW
-	17-11-2015	ISSUED TO CLIENT - FIRST SET	TW
-	17-11-2015	ISSUED TO LANDLORD - FOR APPROVAL	TW
-	17-11-2015	ISSUED TO ENGINEER - FINAL SET	TW
-	02-11-2015	ISSUED TO ENGINEER - FIRST SET	TW

BESTSELLER

225-A DE LIEGE OUEST
MONTREAL, QUEBEC, H2P 1H4

JOB: POLO PARK - CF
1485 PORTAGE AVENUE
WINNIPEG, MANITOBA, R3G 0W4
C.R.U. NO: 304 & 305

SHEET TITLE: REFLECTED CEILING PLAN

DRAWN BY	CHECKED	DATE	SHEET NO
TW	TI	OCT-2015	A-1.20
JOB No. BS1505		SCALE 1/4"=1'-0"	

Filename: I:\Projects\BestSeller\Bestseller_Dept_Store\BS1505_Polo Park\3- CD\A-Current\BS1505-A120.dwg Plotted: 11/25/2015 9:54 AM Plotted by: Mario Muccino

1 A-1.21 PLAN - LIGHTING
1/4" = 1'-0"

COPYRIGHT NOTICE

COPYRIGHT IN THESE DOCUMENTS BELONGS TO LODA INC. AND/OR RENE TRINGALI ARCHITECT. THESE DOCUMENTS MAY NOT BE FORWARDED TO OTHERS, TRANSMITTED, DOWNLOADED OR REPRODUCED IN ANY FORMAT, WHETHER PRINT OR ELECTRONIC WITHOUT THE EXPRESS, WRITTEN PERMISSION OF THE COPYRIGHT OWNER.

DISCLAIMER

USE OF THESE DOCUMENTS IS AT THE USER'S OWN RISK. THE USER SHALL INDEMNIFY AND SAVE HARMLESS LODA INC. AND THEIR EMPLOYEES, AGENTS AND CONSULTANTS FROM AND AGAINST ALL CLAIMS, LOSSES, DEMANDS, COSTS AND EXPENSES (INCLUDING LEGAL FEES), DAMAGES OR RECOVERIES (INCLUDING ANY AMOUNTS PAID IN SETTLEMENT) ARISING BY REASON OF, CAUSED, OR ALLEGED TO BE CAUSED, BY THE USER'S RELIANCE ON THESE DOCUMENTS.

LODA DESIGN

L.O.D.A inc.
1200 de Louvain Ouest, Montreal, Quebec, Canada H4N 1G5
(t) 514.382.0571 www.lodadesign.com

No	DATE	REVISIONS	BY
-	24-11-2015	ISSUED FOR CONSTRUCTION	TW
-	24-11-2015	ISSUED FOR PERMIT	TW
-	17-11-2015	ISSUED TO CLIENT - FIRST SET	TW
-	17-11-2015	ISSUED TO LANDLORD - FOR APPROVAL	TW
-	17-11-2015	ISSUED TO ENGINEER - FINAL SET	TW
-	02-11-2015	ISSUED TO ENGINEER - FIRST SET	TW

BESTSELLER

225-A DE LIEGE OUEST
MONTREAL, QUEBEC, H2P 1H4

JOB
POLO PARK - CF
1455 PORTAGE AVENUE
WINNIPEG, MANITOBA, R3G 0W4
C.R.U. NO: 304 & 305

SHEET TITLE
LIGHTING PLAN

DRAWN BY	CHECKED	DATE	SHEET NO
TW	TI	OCT-2015	A-1.21
JOB No. BS1505		SCALE 1/4"=1'-0"	

Filename: I:\Projects\BestSeller\Bestseller_Dept_Store\BS1505_Polo Park\3- CD\A-Current\BS1505-A121.dwg Plotted: 11/25/2015 9:54 AM Plotted by: Mario Muccino

KEY NOTES - FLOOR FINSIHES PLAN

- COORDINATE ALL FLOOR TRANSITION DETAILS WITH REFERENCES PROVIDED.
- G.C. TO VERIFY THE CONDITION OF THE EXISTING FLOOR SLAB. ADVISE CLIENT AND DESIGNER OF ANY REPAIRS OR EXTRA COSTS REQUIRED TO INSTALL NEW FLOOR FINISH
- FOR FINISH LEGEND SEE PAGE A-6.01

FINISH - T2
LOCATION - RETAIL AREA

FINISH - F1
LOCATION - CENTER RETAIL AREA - CASH AREA

FINISH - V1
LOCATION - STOCKROOM & WASHROOMS

1 — V1 INSTALL 4" VINYL BASEBOARD WITHIN STOCKROOM AND WASHROOM AREA

2 — BESTSELLER LOGO RECESSED INTO TILE FLOOR FINISH COORDINATE WITH DETAILS FOR PLACEMENT AND EXACT SIZES

3 — START POINT OF TILE FLOOR FINISH

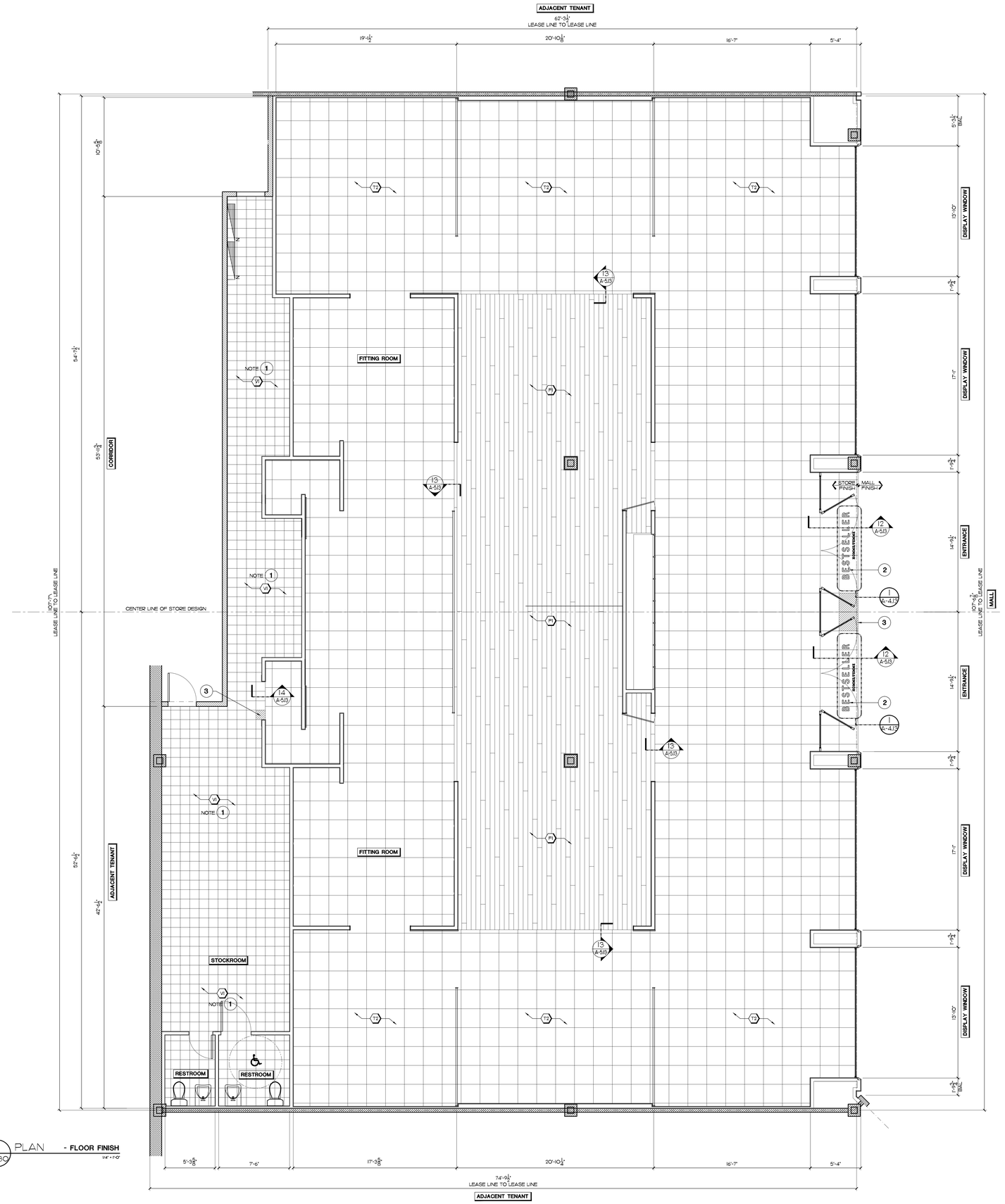

1 A-1.30 PLAN - FLOOR FINISH
1/4" = 1'-0"

COPYRIGHT NOTICE

COPYRIGHT IN THESE DOCUMENTS BELONGS TO LODA INC. AND/OR RENE TRINDALL ARCHITECT. THESE DOCUMENTS MAY NOT BE FORWARDED TO OTHERS, TRANSMITTED, DOWNLOADED OR REPRODUCED IN ANY FORMS, WHETHER PRINT OR ELECTRONIC WITHOUT THE EXPRESS, WRITTEN PERMISSION OF THE COPYRIGHT OWNER.

DISCLAIMER

USE OF THESE DOCUMENTS IS AT THE USER'S OWN RISK. THE USER SHALL INDEMNIFY AND SAVE HARMLESS LODA INC. AND THEIR EMPLOYEES, AGENTS AND CONSULTANTS FROM AND AGAINST ALL CLAIMS, LOSSES, DEMANDS, COSTS AND EXPENSES (INCLUDING LEGAL FEES), DAMAGES OR RECOVERIES (INCLUDING ANY AMOUNTS PAID IN SETTLEMENT) ARISING BY REASON OF, CAUSED, OR ALLEGED TO BE CAUSED, BY THE USER'S RELIANCE ON THESE DOCUMENTS.

LODA DESIGN
L.O.D.A inc.
1200 de Louvain Ouest, Montreal, Quebec, Canada H4N 1G5
(1) 514.382.0571 www.lodadesign.com

No	DATE	REVISIONS	BY
-	24-11-2015	ISSUED FOR CONSTRUCTION	TW
-	24-11-2015	ISSUED FOR PERMIT	TW
-	17-11-2015	ISSUED TO CLIENT - FIRST SET	TW
-	17-11-2015	ISSUED TO LANDLORD - FOR APPROVAL	TW
-	17-11-2015	ISSUED TO ENGINEER - FINAL SET	TW
-	02-11-2015	ISSUED TO ENGINEER - FIRST SET	TW

BESTSELLER

225-A DE LIEGE OUEST
MONTREAL, QUEBEC, H2P 1H4

JOB
POLO PARK - CF
1455 PORTAGE AVENUE
WINNIPEG, MANITOBA, R3G 0W4
CRLL NO: 304 & 305

SHEET TITLE
FLOOR FINISHES PLAN

DRAWN BY	CHECKED	DATE	SHEET NO
TW	TI	OCT-2015	A-1.30
JOB No. BS1505		SCALE 1/4"=1'-0"	

AREAS		
Retail Area	6060 SQ FT	536 SQ M
Display Window	N/A	N/A
Fitting Room	560 SQ FT	52.02 SQ M
StockRoom	780 SQ FT	72.46 SQ M
RestRoom	100 SQ FT	9.29 SQ M
Corridor	N/A	N/A
TOTAL AREA	7500 SQ FT	696.77 SQ M

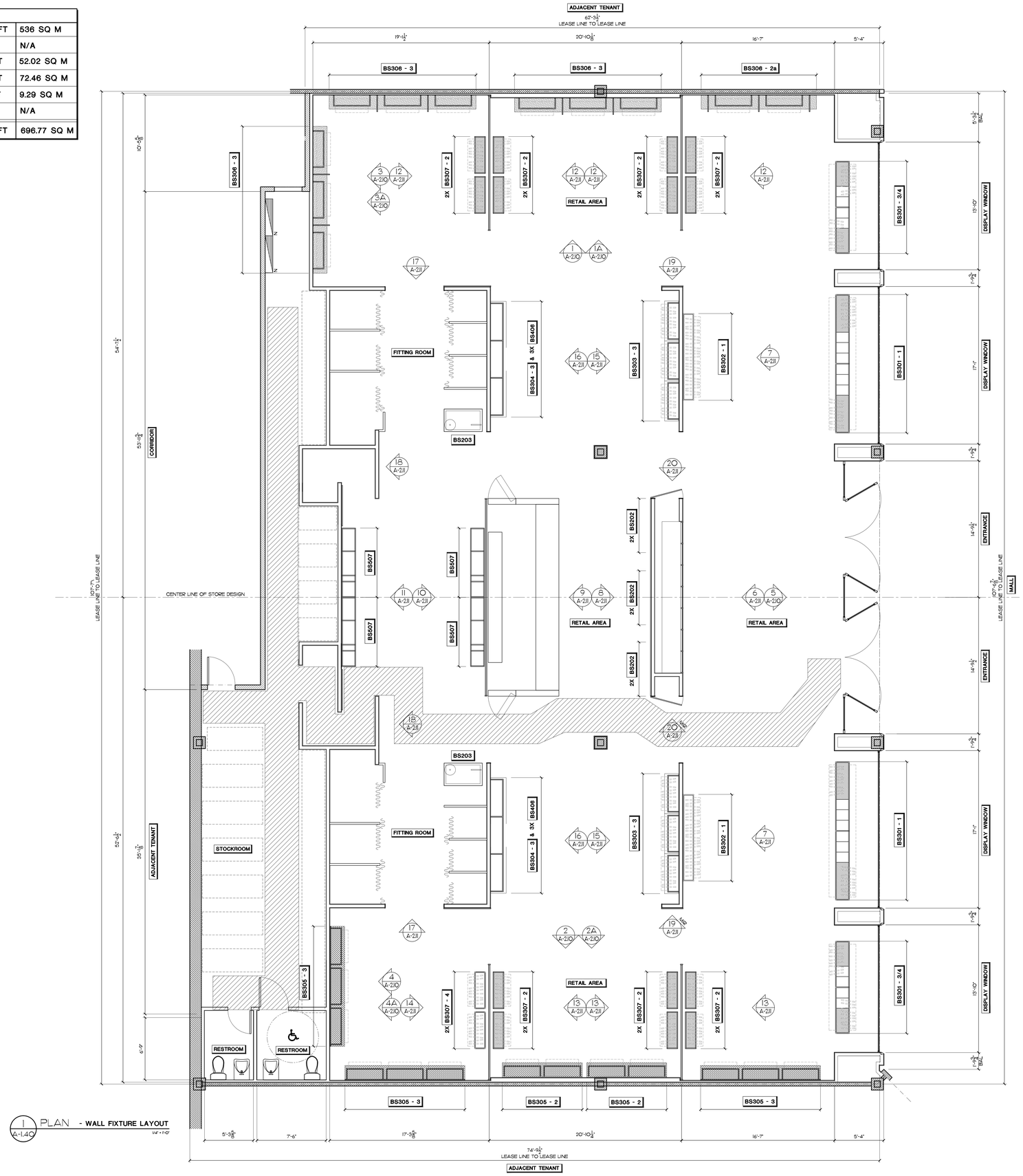

1 A-1.40 PLAN - WALL FIXTURE LAYOUT
1/4" = 1'-0"

COPYRIGHT NOTICE

COPYRIGHT IN THESE DOCUMENTS BELONGS TO LODA INC. AND/OR RENE TRINGALI ARCHITECT. THESE DOCUMENTS MAY NOT BE FORWARDED TO OTHERS, TRANSMITTED, DOWNLOADED OR REPRODUCED IN ANY FORMAT, WHETHER PRINT OR ELECTRONIC WITHOUT THE EXPRESS, WRITTEN PERMISSION OF THE COPYRIGHT OWNER.

DISCLAIMER

USE OF THESE DOCUMENTS IS AT THE USER'S OWN RISK. THE USER AGREES TO INDEMNIFY AND HOLD HARMLESS THE ARCHITECT, ITS EMPLOYEES, AGENTS AND CONSULTANTS FROM AND AGAINST ALL CLAIMS, LOSSES, DEMANDS, COSTS AND EXPENSES (INCLUDING LEGAL FEES), DAMAGES OR RECOVERIES (INCLUDING ANY AMOUNTS PAID IN SETTLEMENT) ARISING BY REASON OF, CAUSED, OR ALLEGED TO BE CAUSED, BY THE USER'S RELIANCE ON THESE DOCUMENTS.

LODA DESIGN

L.O.D.A inc.
1200 de Louvain Ouest, Montreal, Quebec, Canada H4N 1G5
(t) 514.382.0571 www.lodadesign.com

No	DATE	REVISIONS	BY
-	24-11-2015	ISSUED FOR CONSTRUCTION	TW
-	24-11-2015	ISSUED FOR PERMIT	TW
-	17-11-2015	ISSUED TO CLIENT - FIRST SET	TW
-	17-11-2015	ISSUED TO LANDLORD - FOR APPROVAL	TW
-	17-11-2015	ISSUED TO ENGINEER - FINAL SET	TW
-	02-11-2015	ISSUED TO ENGINEER - FIRST SET	TW

BESTSELLER

225-A DE LIEGE OUEST
MONTREAL, QUEBEC, H2P 1H4

JOB
POLO PARK - CF
1485 PORTAGE AVENUE
WINNIPEG, MANITOBA, R3G 0W4
CRU NO: 304 & 305

SHEET TITLE
FLOOR FIXTURES & WALL MERCHANDISING SECTIONS

DRAWN BY	CHECKED	DATE	SHEET NO
TW	TI	OCT-2015	A-1.40
JOB No. BS1505		SCALE 1/4"=1'-0"	

AREAS		
Retail Area	6060 SQ FT	536 SQ M
Display Window	N/A	N/A
Fitting Room	560 SQ FT	52.02 SQ M
StockRoom	780 SQ FT	72.46 SQ M
RestRoom	100 SQ FT	9.29 SQ M
Corridor	N/A	N/A
TOTAL AREA	7500 SQ FT	696.77 SQ M

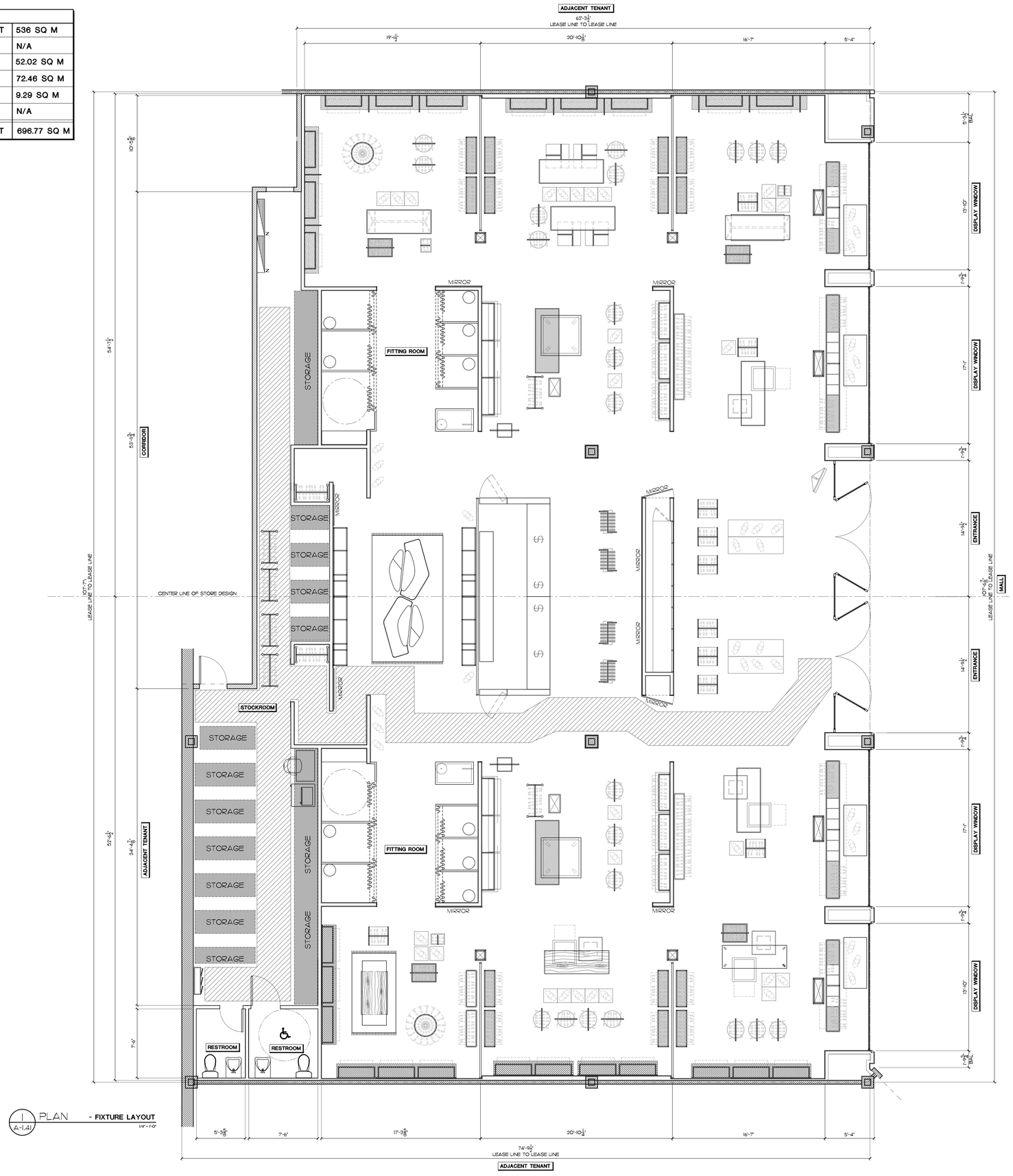

1 PLAN - FIXTURE LAYOUT
A-1.41
1/4" = 1'-0"

COPYRIGHT NOTICE

COPYRIGHT IN THESE DOCUMENTS BELONGS TO LODA INC. AND/OR RENE TRINGALI ARCHITECT. THESE DOCUMENTS MAY NOT BE FORWARDED OR REPRODUCED IN ANY FORMAT OR REPRODUCED IN ANY FORMAT, WHETHER PRINT OR ELECTRONIC WITHOUT THE EXPRESS, WRITTEN PERMISSION OF THE COPYRIGHT OWNER.

DISCLAIMER

USE OF THESE DOCUMENTS IS AT THE USER'S OWN RISK. THE USER SHALL INDEMNIFY AND SAVE HARMLESS LODA INC., AND THEIR EMPLOYEES, AGENTS AND CONSULTANTS FROM AND AGAINST ALL CLAIMS, LOSSES, DEMANDS, COSTS AND EXPENSES (INCLUDING LEGAL FEES), DAMAGES OR RECOVERIES (INCLUDING ANY AMOUNTS PAID IN SETTLEMENT) ARISING BY REASON OF, CAUSED, OR ALLEGED TO BE CAUSED, BY THE USER'S RELIANCE ON THESE DOCUMENTS.

LODA DESIGN
L.O.D.A inc.
1200 de Louvain Ouest, Montreal, Quebec, Canada H4N 1G5
(t) 514.382.0571 www.lodadesign.com

No	DATE	REVISIONS	BY
-	24-11-2015	ISSUED FOR CONSTRUCTION	TW
-	24-11-2015	ISSUED FOR PERMIT	TW
-	17-11-2015	ISSUED TO CLIENT - FIRST SET	TW
-	17-11-2015	ISSUED TO LANDLORD - FOR APPROVAL	TW
-	17-11-2015	ISSUED TO ENGINEER - FINAL SET	TW
-	02-11-2015	ISSUED TO ENGINEER - FIRST SET	TW

BESTSELLER

225-A DE LIEGE OUEST
MONTREAL, QUEBEC, H2P 1H4

JOB
POLO PARK - CF
1485 PORTAGE AVENUE
WINNIPEG, MANITOBA, R3G 0W4
C.R.U. NO: 304 & 305

SHEET TITLE
FLOOR PLAN

DRAWN BY	CHECKED	DATE	SHEET NO
TW	TI	OCT-2015	A-1.41
JOB No. BS1505		SCALE 1/4"=1'-0"	

Filename: I:\Projects\BestSeller\Bestseller_Dept_Store\BS1505_Polo Park\3- CD\A-Current\BS1505-A141.dwg Plotted: 11/25/2015 9:55 AM Plotted by: Mario Muccino

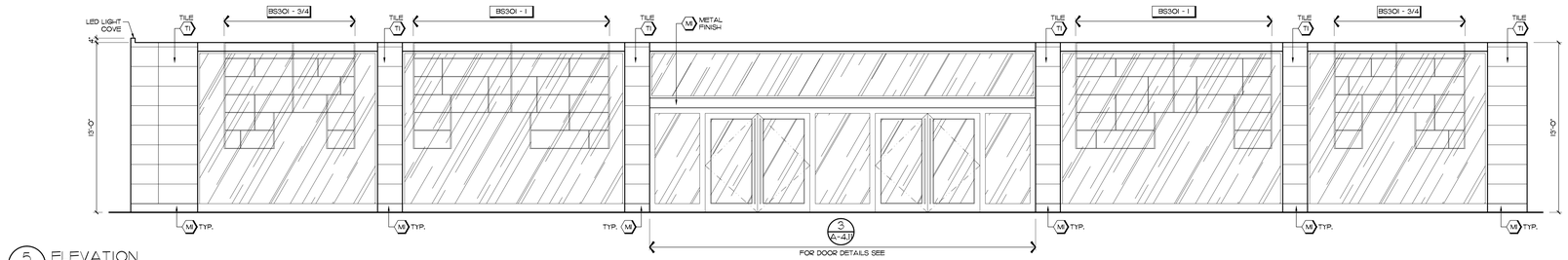

5 ELEVATION A-2.10
1/4" = 1'-0"

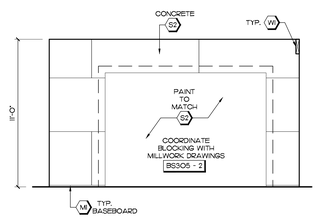

4A ELEVATION - WALL FINISH
A-2.10
1/4" = 1'-0"

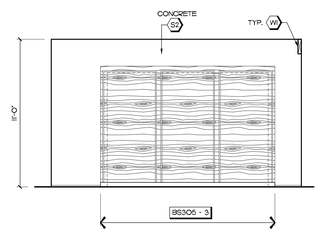

4 ELEVATION - FIXTURES
A-2.10
1/4" = 1'-0"

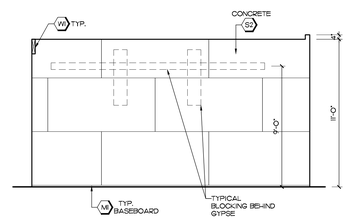

3A ELEVATION - WALL FINISH
A-2.10
1/4" = 1'-0"

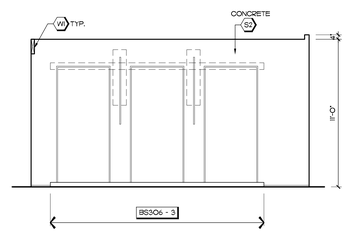

3 ELEVATION - FIXTURES
A-2.10
1/4" = 1'-0"

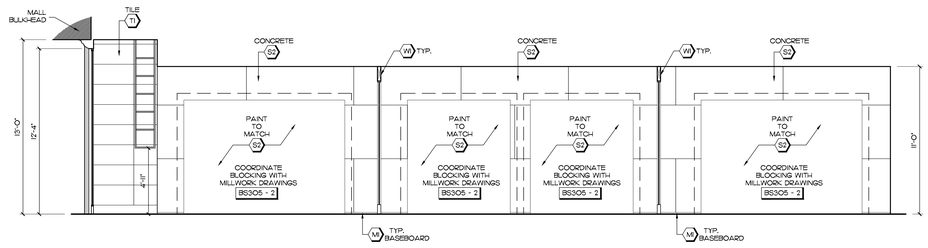

2A ELEVATION - WALL FINISH
A-2.10
1/4" = 1'-0"

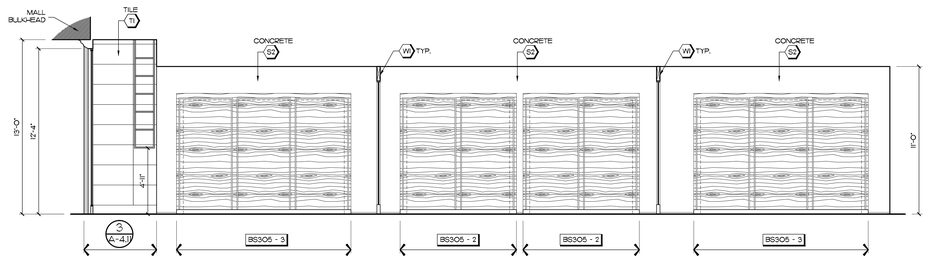

2 ELEVATION - FIXTURES
A-2.10
1/4" = 1'-0"

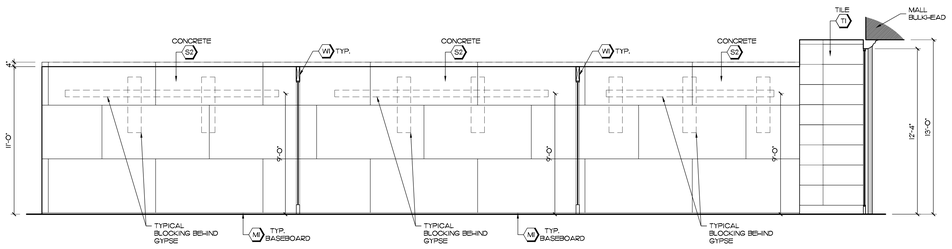

1A ELEVATION - WALL FINISH
A-2.10
1/4" = 1'-0"

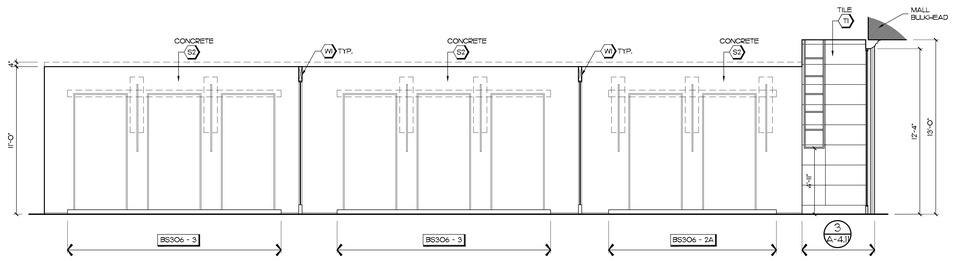

1 ELEVATION - FIXTURES
A-2.10
1/4" = 1'-0"

LODA DESIGN
L.O.D.A inc.
1200 de Louvain Ouest, Montreal, Quebec, Canada H4N 1G5
(t) 514.382.0571 www.lodadesign.com

COPYRIGHT NOTICE

COPYRIGHT IN THESE DOCUMENTS BELONGS TO LODA INC. AND/OR RENE TRINGALI ARCHITECT. THESE DOCUMENTS MAY NOT BE FORWARDED TO OTHERS, TRANSMITTED, DOWNLOADED OR REPRODUCED IN ANY FORMAT, WHETHER PRINT OR ELECTRONIC WITHOUT THE EXPRESS, WRITTEN PERMISSION OF THE COPYRIGHT OWNER.

DISCLAIMER

USE OF THESE DOCUMENTS IS AT THE USER'S OWN RISK. THE USER SHALL INDEMNIFY AND SAVE HARMLESS LODA INC. AND THEIR SUPPLIERS, AGENTS, AFFILIATES, FROM AND AGAINST ALL CLAIMS, LOSSES, DEMANDS, COSTS AND EXPENSES (INCLUDING LEGAL FEES). DAMAGES OR RECOVERIES (INCLUDING ANY AMOUNTS PAID IN SETTLEMENT) ARISING BY REASON OF, CAUSED, OR ALLEGED TO BE CAUSED, BY THE USER'S RELIANCE ON THESE DOCUMENTS.

No	DATE	REVISIONS	BY
-	24-11-2015	ISSUED FOR CONSTRUCTION	TW
-	24-11-2015	ISSUED FOR PERMIT	TW
-	17-11-2015	ISSUED TO CLIENT - FIRST SET	TW
-	17-11-2015	ISSUED TO LANDLORD - FOR APPROVAL	TW
-	17-11-2015	ISSUED TO ENGINEER - FINAL SET	TW
-	02-11-2015	ISSUED TO ENGINEER - FIRST SET	TW

BESTSELLER

225-A DE LIEGE OUEST
MONTREAL, QUEBEC, H2P 1H4

JOB
POLO PARK - CF
1455 PORTAGE AVENUE
WINNIPEG, MANITOBA, R3G 0W4
C.R.U. NO: 304 & 305

SHEET TITLE
INTERIOR ELEVATIONS

DRAWN BY	CHECKED	DATE	SHEET NO
TW	TI	OCT-2015	A-2.10
JOB No. BS1505		SCALE 1/4"=1'-0"	

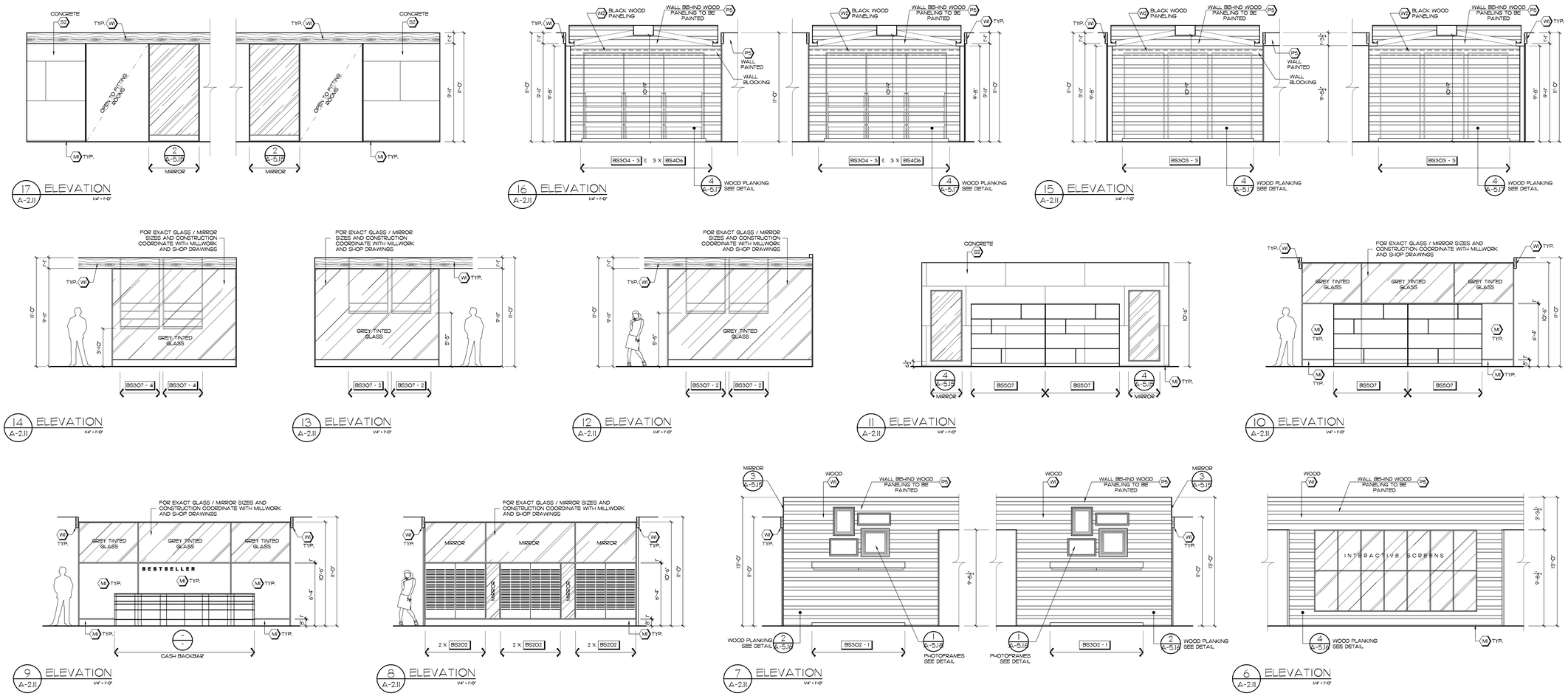

COPYRIGHT NOTICE

COPYRIGHT IN THESE DOCUMENTS BELONGS TO LODA INC. AND/OR RENE TRINGALI ARCHITECT. THESE DOCUMENTS MAY NOT BE FORWARDED TO OTHERS, TRANSMITTED, DOWNLOADED OR REPRODUCED IN ANY FORMAT, WHETHER PRINT OR ELECTRONIC WITHOUT THE EXPRESS, WRITTEN PERMISSION OF THE COPYRIGHT OWNER.

DISCLAIMER

USE OF THESE DOCUMENTS IS AT THE USER'S OWN RISK. THE USER SHALL INDEMNIFY AND SAVE HARMLESS LODA INC., AND THEIR EMPLOYEES, AGENTS AND CONSULTANTS FROM AND AGAINST ALL CLAIMS, LOSSES, DEMANDS, COSTS AND EXPENSES (INCLUDING LEGAL FEES), DAMAGES AND SUBSEQUENT DAMAGES (INCLUDING LOSS OF SETTLEMENT) ARISING BY REASON OF, CAUSED, OR ALLEGED TO BE CAUSED, BY THE USER'S RELIANCE ON THESE DOCUMENTS.

LODA DESIGN
L.O.D.A inc.
1200 de Louvain Ouest, Montreal, Quebec, Canada H4N 1G5
(t) 514.382.0571 www.lodadesign.com

No	DATE	REVISIONS	BY
-	24-11-2015	ISSUED FOR CONSTRUCTION	TW
-	24-11-2015	ISSUED FOR PERMIT	TW
-	17-11-2015	ISSUED TO CLIENT - FIRST SET	TW
-	17-11-2015	ISSUED TO LANDLORD - FOR APPROVAL	TW
-	17-11-2015	ISSUED TO ENGINEER - FINAL SET	TW
-	02-11-2015	ISSUED TO ENGINEER - FIRST SET	TW

BESTSELLER

225-A DE LIEGE OUEST
MONTREAL, QUEBEC, H2P 1H4

JOB
POLO PARK - OF
1485 PORTAGE AVENUE
WINNIPEG, MANITOBA, R3G 0W4
C.R.U. NO.: 304 & 305

SHEET TITLE
INTERIOR ELEVATIONS

DRAWN BY	CHECKED	DATE	SHEET NO
TW	TI	OCT-2015	A-2.11
JOB No. BS1505		SCALE 1/4"=1'-0"	

Filename: I:\Projects\BestSeller\Bestseller_Dept_Store\BS1505_Polo Park\3- CD\A-Current\BS1505-A210.dwg Plotted: 11/25/2015 9:55 AM Plotted by: Mario Muccino

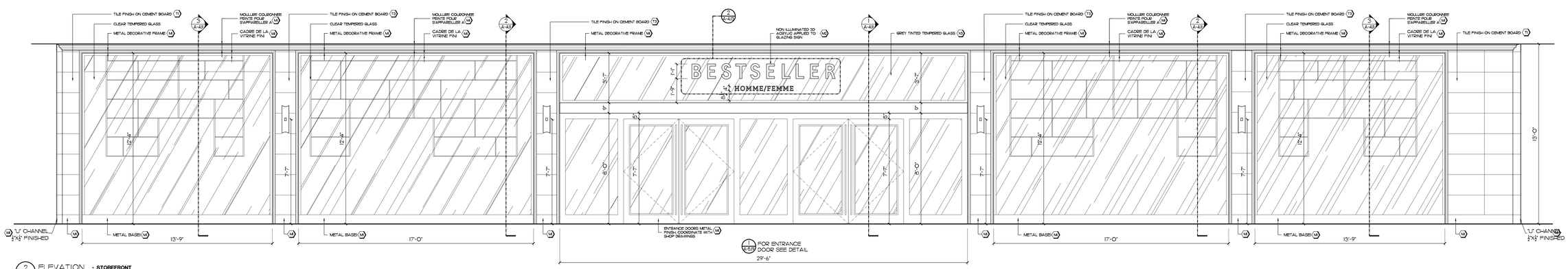

2 ELEVATION - STOREFRONT
A-4.10 3/8" = 1'-0"

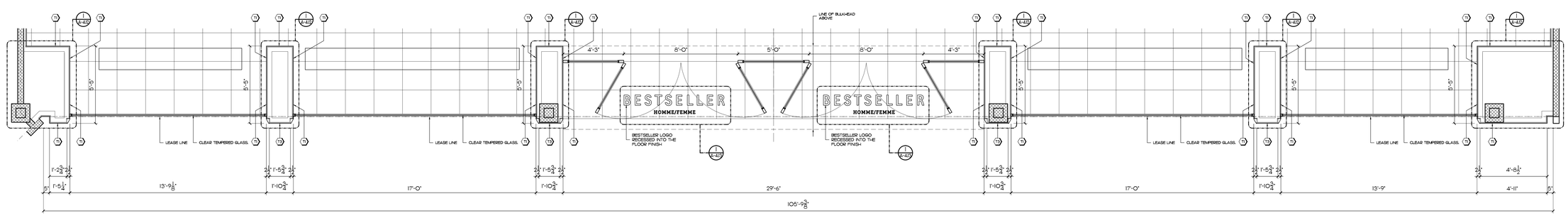

1 PLAN - STOREFRONT
A-4.10 3/8" = 1'-0"

COPYRIGHT NOTICE

COPYRIGHT IN THESE DOCUMENTS BELONGS TO LODA INC. AND/OR THE CONSULTANTS. THESE DOCUMENTS MAY NOT BE LOANED OR REGARDED TO OTHERS, TRANSMITTED, DOWNLOADED OR REPRODUCED IN ANY FORMAT; WHETHER PRINT OR ELECTRONIC WITHOUT THE EXPRESS, WRITTEN PERMISSION OF THE COPYRIGHT OWNER.

DISCLAIMER

USE OF THESE DOCUMENTS IS AT THE USER'S OWN RISK. THE USER SHALL INDEMNIFY AND SAVE HARMLESS LODA INC., AND THEIR EMPLOYEES, AGENTS AND CONSULTANTS FROM AND AGAINST ALL CLAIMS, LOSSES, DEMANDS, COSTS AND EXPENSES (INCLUDING LEGAL FEES), DAMAGES OR RECOVERIES (INCLUDING ANY AMOUNTS PAID IN SETTLEMENT) ARISING BY REASON OF, CAUSED, OR ALLEGED TO BE CAUSED, BY THE USER'S RELIANCE ON THESE DOCUMENTS.

LODA DESIGN

L.O.D.A inc.
1200 de Louvain Ouest, Montreal, Quebec, Canada H4N 1G5
(t) 514.382.0571 www.lodadesign.com

No	DATE	REVISIONS	BY
-	24-11-2015	ISSUED FOR CONSTRUCTION	TW
-	24-11-2015	ISSUED FOR PERMIT	TW
-	17-11-2015	ISSUED TO CLIENT - FIRST SET	TW
-	17-11-2015	ISSUED TO LANDLORD - FOR APPROVAL	TW
-	17-11-2015	ISSUED TO ENGINEER - FINAL SET	TW
-	02-11-2015	ISSUED TO ENGINEER - FIRST SET	TW

BESTSELLER

225-A DE LIEGE OUEST
MONTREAL, QUEBEC, H2P 1H4

JOB
POLO PARK - OF
1455 PORTAGE AVENUE
WINNIPEG, MANITOBA, R3G 0W4
C.R.U. NO.: 304 & 305

SHEET TITLE
STOREFRONT PLAN

DRAWN BY	CHECKED	DATE	SHEET NO
TW	TI	OCT-2015	A-4.10
JOB No. BS1505		SCALE SEE PLAN	

Filename: I:\Projects\BestSeller\Bestseller_Dept_Store\BS1505_Polo Park\3- CD\A-Current\BS1505-A410.dwg Plotted: 11/25/2015 9:55 AM Plotted by: Mario Muccino

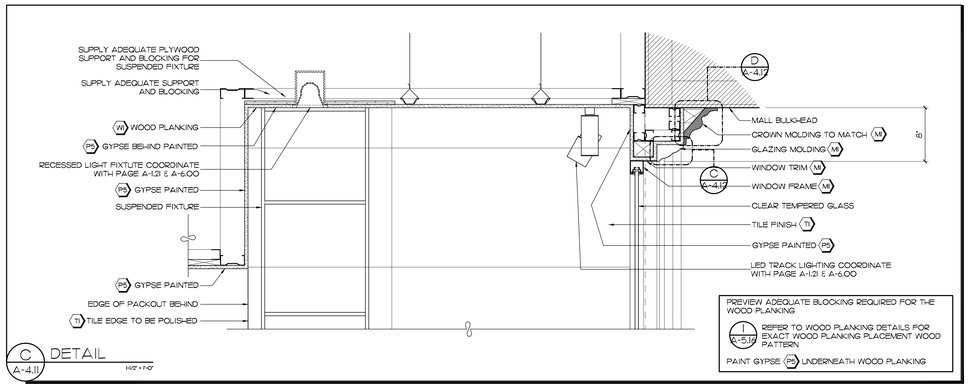

C A-4.II DETAIL 1-1/2" = 1'-0"

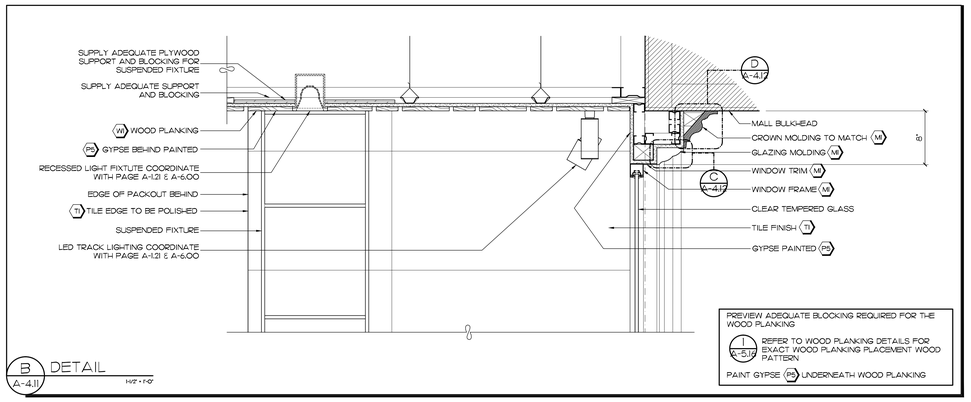

B A-4.II DETAIL 1-1/2" = 1'-0"

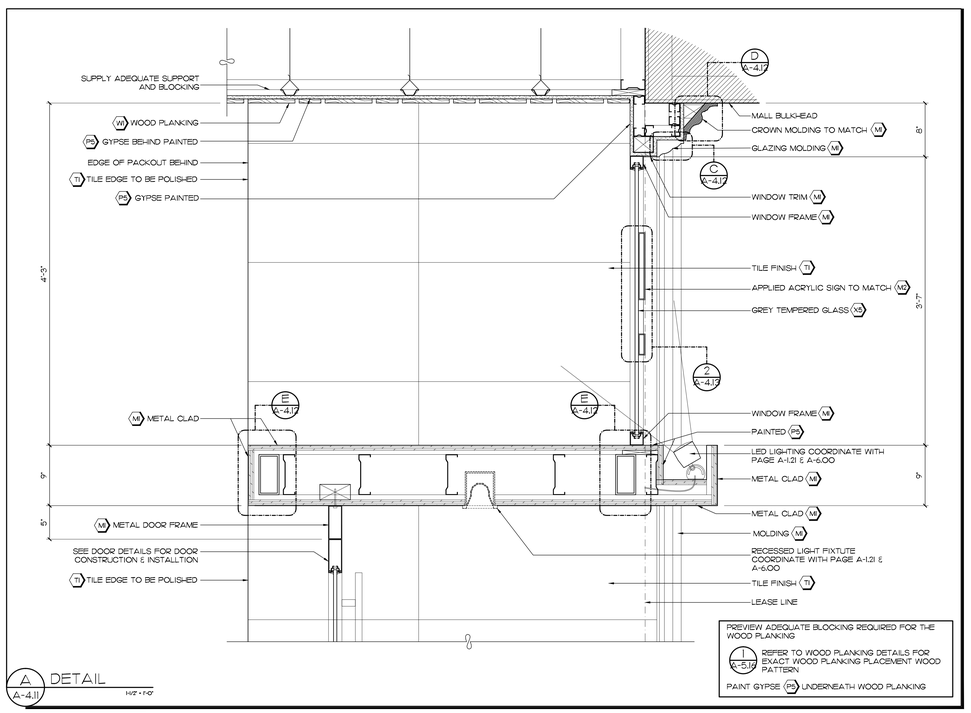

A A-4.II DETAIL 1-1/2" = 1'-0"

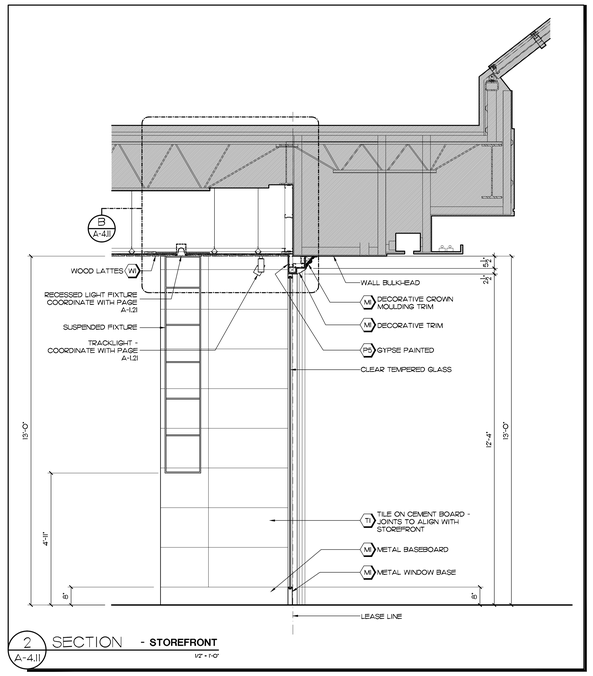

2 A-4.II SECTION - STOREFRONT 1/2" = 1'-0"

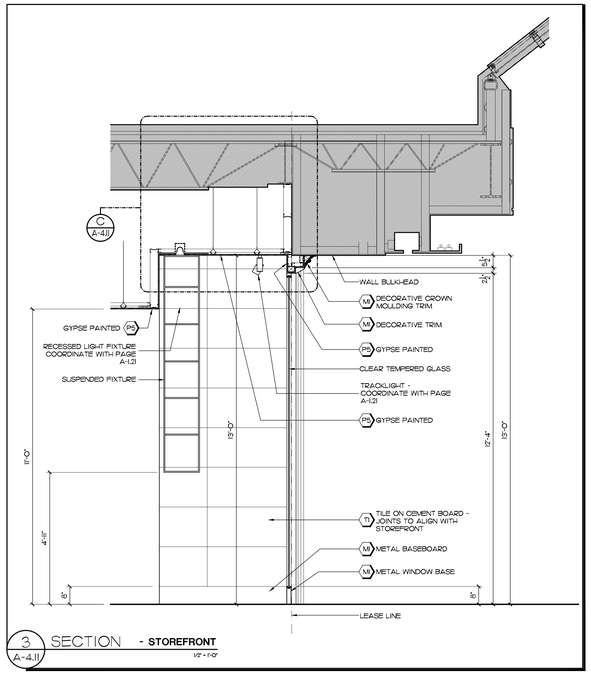

3 A-4.II SECTION - STOREFRONT 1/2" = 1'-0"

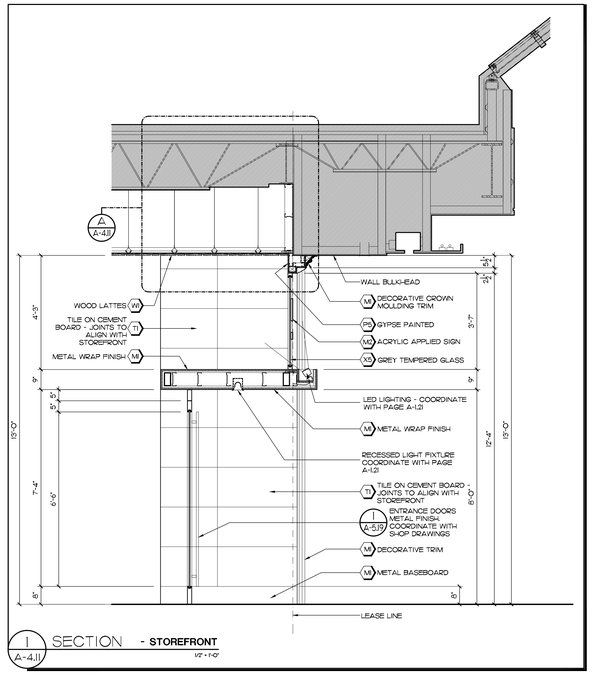

1 A-4.II SECTION - STOREFRONT 1/2" = 1'-0"

LODA DESIGN

L.O.D.A inc.
1200 de Louvain Ouest, Montreal, Quebec, Canada H4N 1G5
(t) 514.382.0571 www.lodadesign.com

COPYRIGHT NOTICE

COPYRIGHT IN THESE DOCUMENTS BELONGS TO LODA INC. AND/OR RENE TRINGALI ARCHITECT. THESE DOCUMENTS MAY NOT BE FORWARDED TO OTHERS, TRANSMITTED, DOWNLOADED OR REPRODUCED IN ANY FORMAT, WHETHER PRINT OR ELECTRONIC WITHOUT THE EXPRESS, WRITTEN PERMISSION OF THE COPYRIGHT OWNER.

DISCLAIMER

USE OF THESE DOCUMENTS IS AT THE USER'S OWN RISK. THE USER SHALL INDEMNIFY AND SAVE HARMLESS LODA INC. AND THEIR EMPLOYEES, AGENTS AND CONSULTANTS FROM AND AGAINST ALL CLAIMS, LOSSES, DEMANDS, COSTS AND EXPENSES (INCLUDING LEGAL FEES), DAMAGES OR RECOVERIES (INCLUDING ANY AMOUNTS PAID IN SETTLEMENT) ARISING BY REASON OF, CAUSED, OR ALLEGED TO BE CAUSED, BY THE USER'S RELIANCE ON THESE DOCUMENTS.

No	DATE	REVISIONS	BY
-	24-11-2015	ISSUED FOR CONSTRUCTION	TW
-	24-11-2015	ISSUED FOR PERMIT	TW
-	17-11-2015	ISSUED TO CLIENT - FIRST SET	TW
-	17-11-2015	ISSUED TO LANDLORD - FOR APPROVAL	TW
-	17-11-2015	ISSUED TO ENGINEER - FINAL SET	TW
-	02-11-2015	ISSUED TO ENGINEER - FIRST SET	TW

BESTSELLER

225-A DE LIEGE OUEST
MONTREAL, QUEBEC, H2P 1H4

JOB
POLO PARK - CF
1455 PORTAGE AVENUE
WINNIPEG, MANITOBA, R3G 0W4
C.R.U. NO.: 304 & 305

SHEET TITLE
STOREFRONT SECTIONS & DETAILS

DRAWN BY	CHECKED	DATE	SHEET NO
TW	TI	OCT-2015	A-4.11
JOB No. BS1505		SCALE VARIES	

Filename: I:\Projects\BestSeller\Bestseller_Dept_Store\BS1505_Polo Park\3- CD\A-Current\BS1505-A410.dwg Plotted: 11/25/2015 9:56 AM Plotted by: Mario Muccino

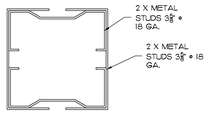

F DETAIL
A-4.12 6" = 1'-0"

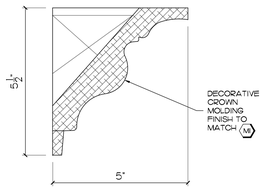

D DETAIL
A-4.12 6" = 1'-0"

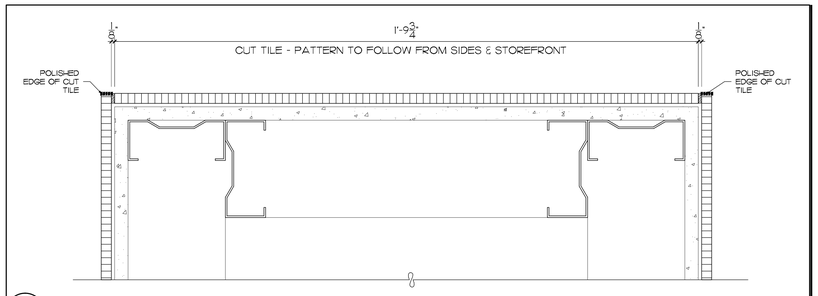

B DETAIL
A-4.12 6" = 1'-0"

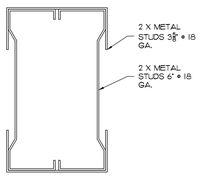

E DETAIL
A-4.12 6" = 1'-0"

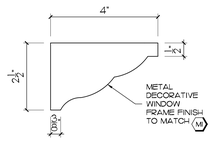

C DETAIL
A-4.12 6" = 1'-0"

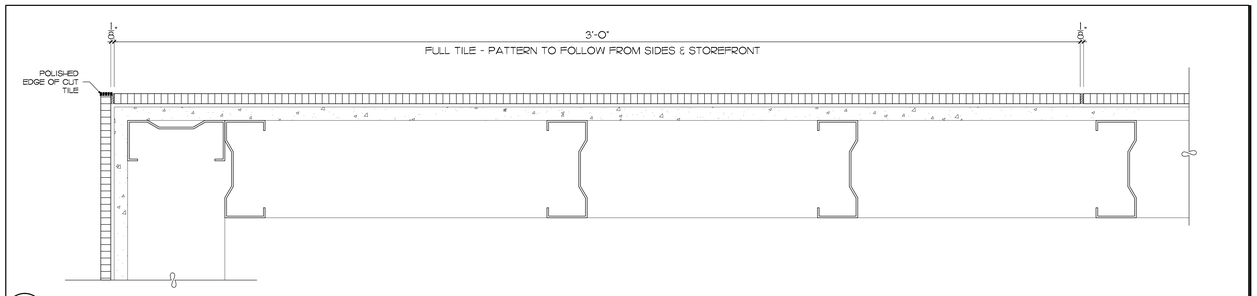

A DETAIL
A-4.12 6" = 1'-0"

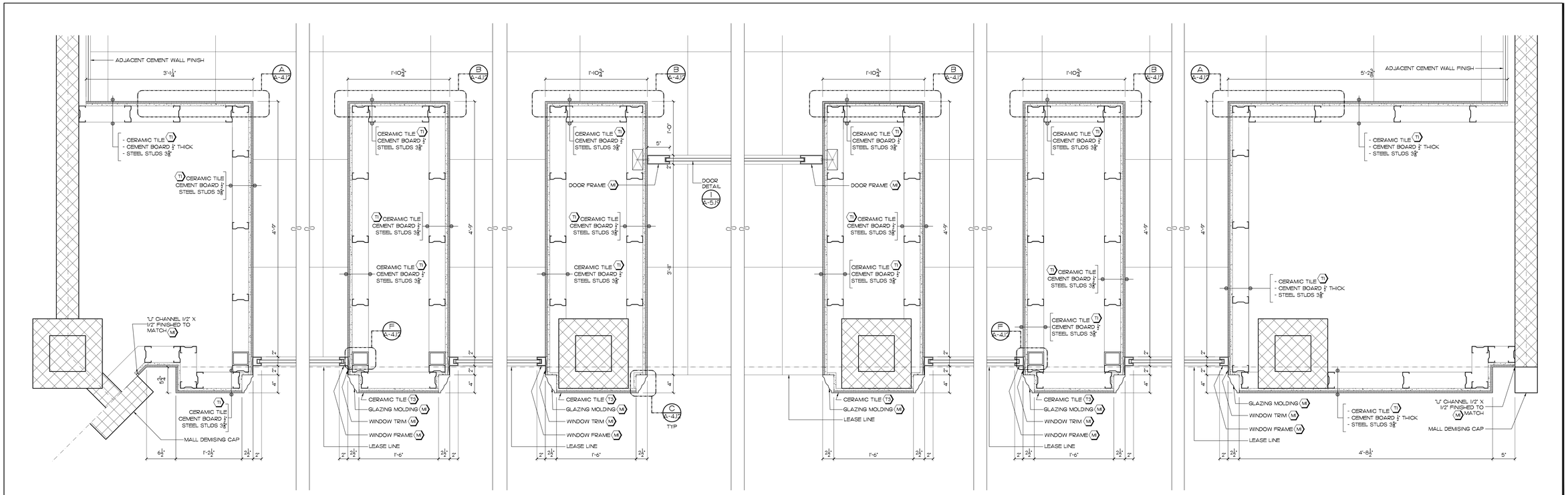

1 DETAIL - STOREFRONT
A-4.12 1 - 1/2" = 1'-0"

COPYRIGHT NOTICE

COPYRIGHT IN THESE DOCUMENTS BELONGS TO LODA INC. AND/OR THE AUTHOR. THESE DOCUMENTS MAY NOT BE USED OR REGARDED TO OTHERS, TRANSMITTED, DOWNLOADED OR REPRODUCED IN ANY FORMAT, WHETHER PRINT OR ELECTRONIC WITHOUT THE EXPRESS, WRITTEN PERMISSION OF THE COPYRIGHT OWNER.

DISCLAIMER

USE OF THESE DOCUMENTS IS AT THE USER'S OWN RISK. THE USER SHALL INDEMNIFY AND SAVE HARMLESS LODA INC., AND THEIR EMPLOYEES, AGENTS AND CONSULTANTS FROM AND AGAINST ALL CLAIMS, LOSSES, DEMANDS, COSTS AND EXPENSES (INCLUDING LEGAL FEES). DAMAGES OR RECOVERIES (INCLUDING ANY AMOUNTS PAID IN SETTLEMENT) ARISING BY REASON OF, CAUSED, OR ALLEGED TO BE CAUSED, BY THE USER'S RELIANCE ON THESE DOCUMENTS.

LODA DESIGN
L.O.D.A inc.
1200 de Louvain Ouest, Montreal, Quebec, Canada H4N 1G5
(t) 514.382.0571 www.lodadesign.com

No	DATE	REVISIONS	BY
-	24-11-2015	ISSUED FOR CONSTRUCTION	TW
-	24-11-2015	ISSUED FOR PERMIT	TW
-	17-11-2015	ISSUED TO CLIENT - FIRST SET	TW
-	17-11-2015	ISSUED TO LANDLORD - FOR APPROVAL	TW
-	17-11-2015	ISSUED TO ENGINEER - FINAL SET	TW
-	02-11-2015	ISSUED TO ENGINEER - FIRST SET	TW

BESTSELLER

225-A DE LIEGE OUEST
MONTREAL, QUEBEC, H2P 1H4

JOB
POLO PARK - CF
1455 PORTAGE AVENUE
WINNIPEG, MANITOBA, R3G 0W4
C.R.U. NO.: 304 & 305

SHEET TITLE
STOREFRONT DETAILS

DRAWN BY	CHECKED	DATE	SHEET NO
TW	TI	OCT-2015	A-4.12
JOB No. BS1505		SCALE SEE PLAN	

Filename: I:\Projects\BestSeller\Bestseller_Dept_Store\BS1505_Polo Park\3- CD\A-Current\BS1505-A410.dwg Plotted: 11/25/2015 9:56 AM Plotted by: Mario Muccino

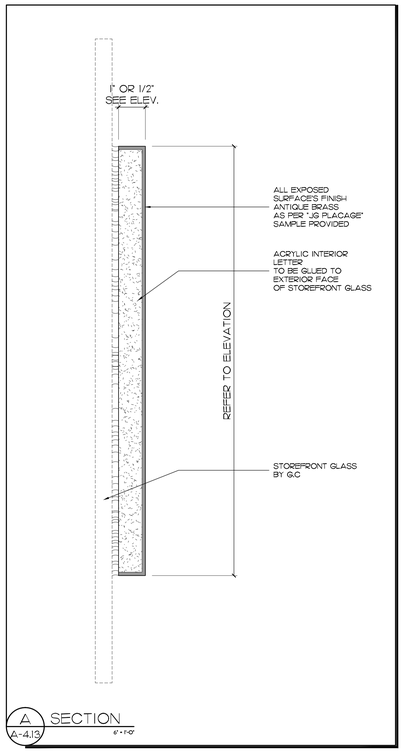

A A-4.13 SECTION
6" = 1'-0"

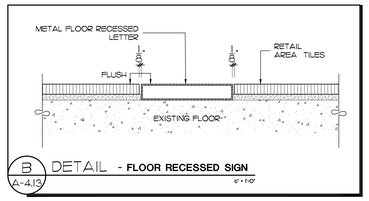

B A-4.13 DETAIL - **FLOOR RECESSED SIGN**
6" = 1'-0"

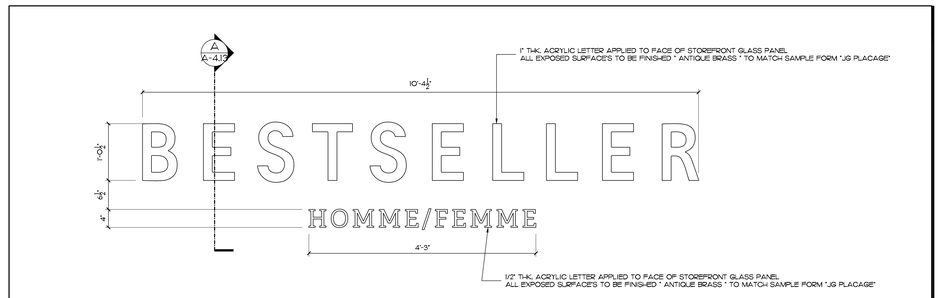

2 A-4.13 PLAN -**STOREFRONT EXTERIOR SIGN**
1" = 1'-0"

QTY: 1

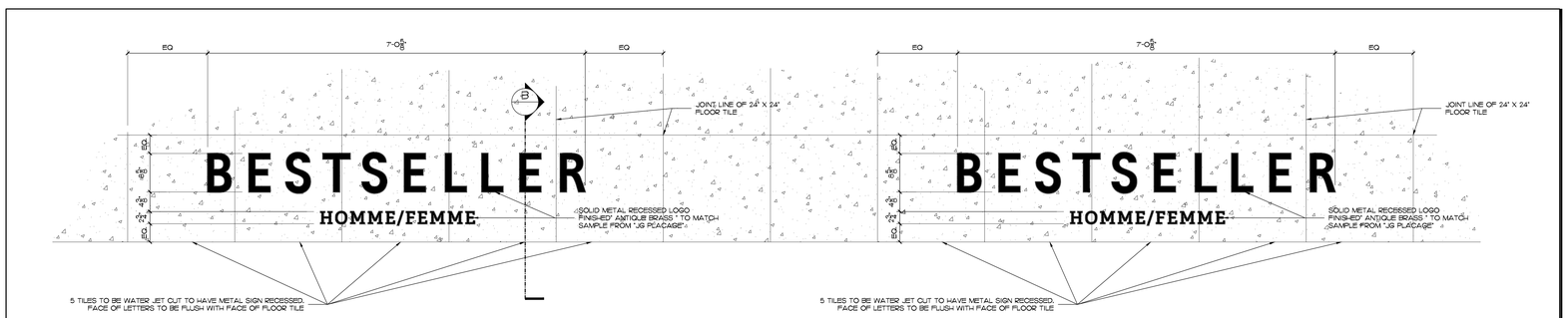

1 A-4.13 PLAN -**STOREFRONT RECESSED FLOOR SIGNS**
1" = 1'-0"

LODA
DESIGN

L.O.D.A inc.
1200 de Louvain Ouest, Montreal, Quebec, Canada H4N 1G5
(t) 514.382.0571 www.lodadesign.com

COPYRIGHT NOTICE

COPYRIGHT IN THESE DOCUMENTS BELONGS TO LODA INC. AND/OR RENE TRINGALI ARCHITECT. THESE DOCUMENTS MAY NOT BE FORWARDED TO OTHERS, TRANSMITTED, DOWNLOADED OR REPRODUCED IN ANY FORMAT, WHETHER PRINT OR ELECTRONIC WITHOUT THE EXPRESS, WRITTEN PERMISSION OF THE COPYRIGHT OWNER.

DISCLAIMER

USE OF THESE DOCUMENTS IS AT THE USER'S OWN RISK. THE USER SHALL INDEMNIFY AND SAVE HARMLESS LODA INC. AND THEIR EMPLOYEES, AGENTS AND CONSULTANTS FROM AND AGAINST ALL CLAIMS, LOSSES, DEMANDS, COSTS AND EXPENSES (INCLUDING LEGAL FEES), DAMAGES OR RECOVERIES (INCLUDING ANY AMOUNTS PAID IN SETTLEMENT) ARISING BY REASON OF, CAUSED, OR ALLEGED TO BE CAUSED, BY THE USER'S RELIANCE ON THESE DOCUMENTS.

No	DATE	REVISIONS	BY
-	24-11-2015	ISSUED FOR CONSTRUCTION	TW
-	24-11-2015	ISSUED FOR PERMIT	TW
-	17-11-2015	ISSUED TO CLIENT - FIRST SET	TW
-	17-11-2015	ISSUED TO LANDLORD - FOR APPROVAL	TW
-	17-11-2015	ISSUED TO ENGINEER - FINAL SET	TW
-	02-11-2015	ISSUED TO ENGINEER - FIRST SET	TW

BESTSELLER

225-A DE LIEGE OUEST
MONTREAL, QUEBEC, H2P 1H4

JOB
POLO PARK - CF
1455 PORTAGE AVENUE
WINNIPEG, MANITOBA, R3G 0W4
C.R.U. NO: 304 & 305

SHEET TITLE
SIGNAGE DETAILS

DRAWN BY	CHECKED	DATE	SHEET NO
TW	TI	OCT-2015	A-4.13
JOB No. BS1505		SCALE VARIES	

Filename: I:\Projects\BestSeller\Bestseller_Dept_Store\BS1505_Polo Park\3- CD\A-Current\BS1505-A410.dwg Plotted: 11/25/2015 9:56 AM Plotted by: Mario Muccino

KEY NOTES:

FITTING ROOMS DESIGN TO BE COORDINATED & FINALIZED BETWEEN CLIENT, DESIGNER & MILLWORK SHOP

FOR SCHEMATIC PURPOSES ONLY. EXACT SHOP DIMENSIONS TO BE PROVIDED BY MILLWORK CONTRACTOR. SHOP DRAWINGS TO BE APPROVED

FITTING ROOM ACCESSORIES

FITTING ROOM BAR & HOOKS TO BE COORDINATED WITH METAL SHOP

STANDARD QUANTITY ONE HANG BAR AND ONE HOOK SET PER FITTING ROOM.

COORDINATE PLACEMENT & HEIGHTS OF HANG BAR AND SHELF WITH DESIGNER & CLIENT.

FOR INSTALLATION OF CURTAINS AND TRACKS, COORDINATE WITH FABRIC SUPPLIER.

INSTALLATION LEGEND

	FITTING ROOMS - HANGBAR 2 / A-4.4 STANDARD FITTING ROOM - SEE DETAIL 1 / A-4.4 BARRIER FREE FITTING ROOM - SEE DETAIL
	FITTING ROOMS - HOOKS 2 / A-4.4 STANDARD FITTING ROOM - SEE DETAIL 1 / A-4.4 BARRIER FREE FITTING ROOM - SEE DETAIL
3'-0" OR MIRROR (FULL WALL)	MIRRORS INSTALLATION - SEE DETAIL 4 / A-4.4

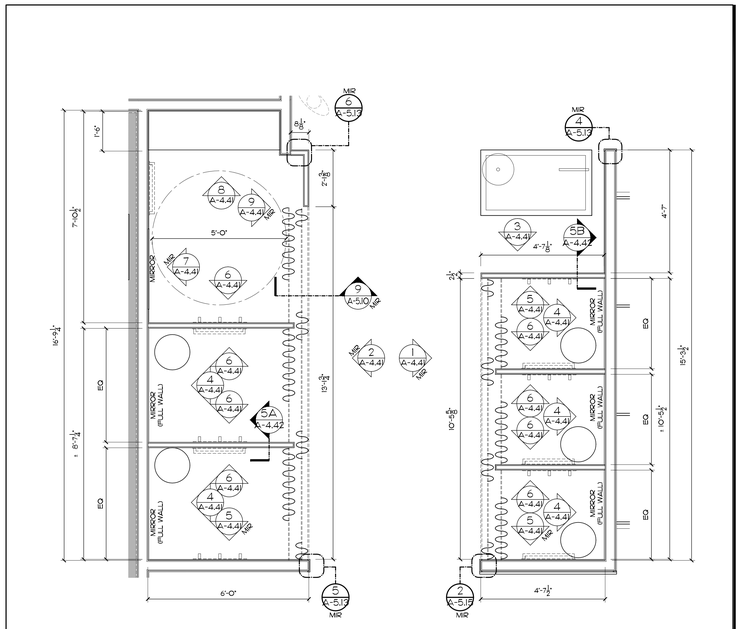

B PLAN - FITTING ROOM MENS
1/2" = 1'-0"

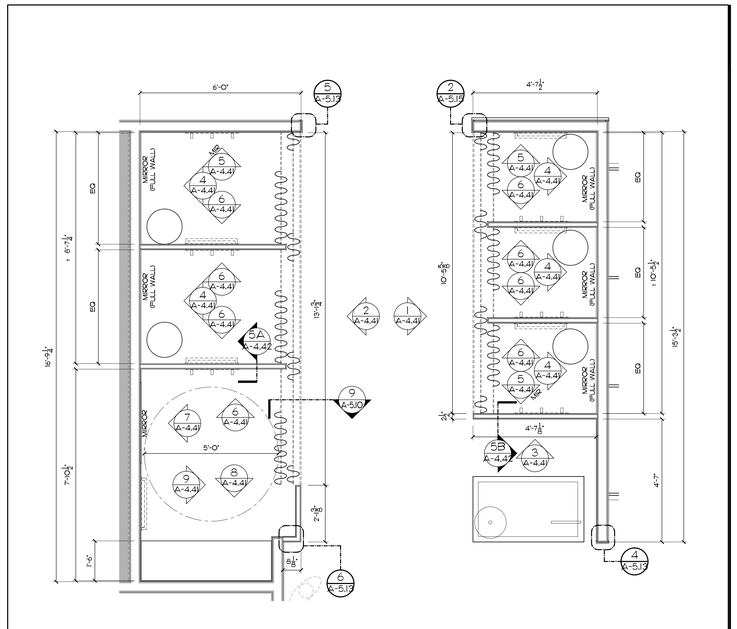

A PLAN - FITTING ROOM WOMENS
1/2" = 1'-0"

COPYRIGHT NOTICE

COPYRIGHT IN THESE DOCUMENTS BELONGS TO LODA INC. AND/OR RENE TRINGALI ARCHITECT. THESE DOCUMENTS MAY NOT BE FORWARDED TO OTHERS, TRANSMITTED, DOWNLOADED OR REPRODUCED IN ANY FORMAT, WHETHER PRINT OR ELECTRONIC WITHOUT THE EXPRESS, WRITTEN PERMISSION OF THE COPYRIGHT OWNER.

DISCLAIMER

USE OF THESE DOCUMENTS IS AT THE USER'S OWN RISK. THE USER SHALL INDEMNIFY AND SAVE HARMLESS LODA INC., AND THEIR EMPLOYEES, AGENTS AND CONSULTANTS FROM AND AGAINST ALL CLAIMS, LIABILITIES, LOSSES, DAMAGES, COSTS, EXPENSES (INCLUDING LEGAL FEES), DAMAGES OR REQUIREMENTS (INCLUDING ANY AMOUNTS PAID IN SETTLEMENT) ARISING BY REASON OF, CAUSED, OR ALLEGED TO BE CAUSED, BY THE USER'S RELIANCE ON THESE DOCUMENTS.

LODA DESIGN

L.O.D.A inc.
1200 de Louvain Ouest, Montreal, Quebec, Canada H4N 1G5
(t) 514.382.0571 www.lodadesign.com

No.	DATE	REVISIONS	BY
-	24-11-2015	ISSUED FOR CONSTRUCTION	TW
-	24-11-2015	ISSUED FOR PERMIT	TW
-	17-11-2015	ISSUED TO CLIENT - FIRST SET	TW
-	17-11-2015	ISSUED TO LANDLORD - FOR APPROVAL	TW
-	17-11-2015	ISSUED TO ENGINEER - FINAL SET	TW
-	02-11-2015	ISSUED TO ENGINEER - FIRST SET	TW

BESTSELLER

225-A DE LIEGE OUEST
MONTREAL, QUEBEC, H2P 1H4

JOB
POLO PARK - CF
1455 PORTAGE AVENUE
WINNIPEG, MANITOBA, R3G 0W4
CRLL NO/ 304 & 305

SHEET TITLE
FITTING ROOM DETAILS

DRAWN BY	CHECKED	DATE	SHEET NO
TW	TI	OCT-2015	A-4.40
JOB No. BS1505		SCALE VARIES	

Filename: I:\Projects\BestSeller\Bestseller_Dept_Store\BS1505_Polo Park\3- CD\A-Current\BS1505-A440.dwg Plotted: 11/25/2015 9:56 AM Plotted by: Mario Muccino

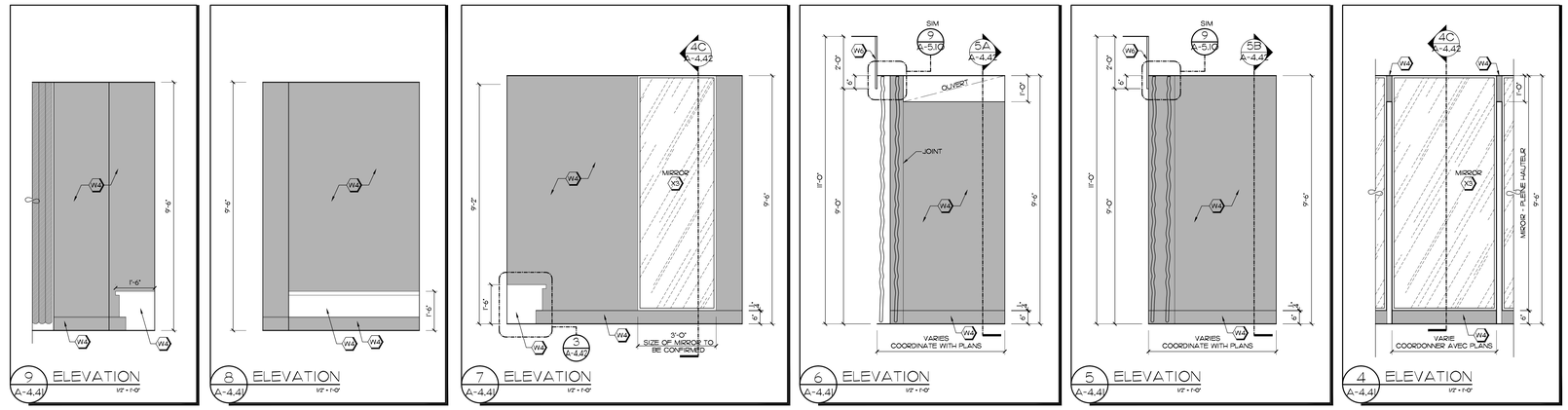

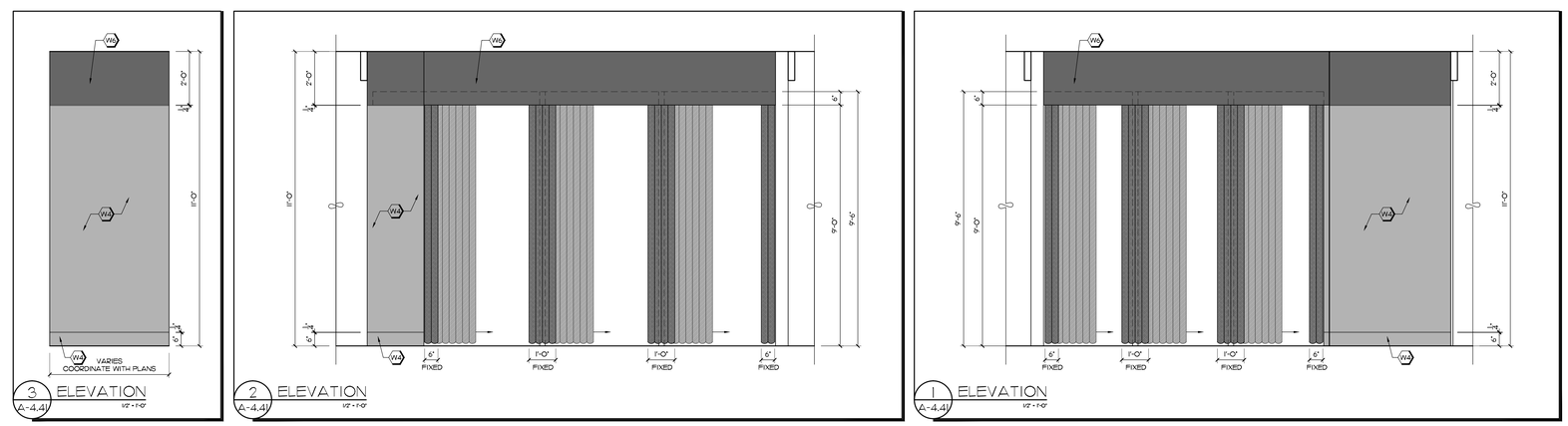

LODA DESIGN

L.O.D.A inc.
1200 de Louvain Ouest, Montreal, Quebec, Canada H4N 1G5
(1) 514.382.0571 www.lodadesign.com

COPYRIGHT NOTICE

COPYRIGHT IN THESE DOCUMENTS BELONGS TO LODA INC. AND/OR RENE TRINGALI ARCHITECT. THESE DOCUMENTS MAY NOT BE FORWARDED TO OTHERS, TRANSMITTED, DOWNLOADED OR REPRODUCED IN ANY FORMAT, WHETHER PRINT OR ELECTRONIC WITHOUT THE EXPRESS, WRITTEN PERMISSION OF THE COPYRIGHT OWNER.

DISCLAIMER

USE OF THESE DOCUMENTS IS AT THE USER'S OWN RISK. THE USER SHALL INDEMNIFY AND HOLD HARMLESS LODA INC. AND ITS EMPLOYEES, AGENTS AND CONSULTANTS FROM AND AGAINST ALL CLAIMS, LOSSES, DEMANDS, COSTS AND EXPENSES (INCLUDING LEGAL FEES), DAMAGES OR RECOVERIES (INCLUDING ANY AMOUNTS PAID IN SETTLEMENT) ARISING BY REASON OF, CAUSED, OR ALLEGED TO BE CAUSED, BY THE USER'S RELIANCE ON THESE DOCUMENTS.

No	DATE	REVISIONS	BY
-	24-11-2015	ISSUED FOR CONSTRUCTION	TW
-	24-11-2015	ISSUED FOR PERMIT	TW
-	17-11-2015	ISSUED TO CLIENT - FIRST SET	TW
-	17-11-2015	ISSUED TO LANDLORD - FOR APPROVAL	TW
-	17-11-2015	ISSUED TO ENGINEER - FINAL SET	TW
-	02-11-2015	ISSUED TO ENGINEER - FIRST SET	TW

BESTSELLER

225-A DE LIEGE OUEST
MONTREAL, QUEBEC, H2P 1H4

JOB
POLO PARK - CF
1485 PORTAGE AVENUE
WINNIPEG, MANITOBA, R3G 0W4
CRU NO: 304 & 305

SHEET TITLE
FITTING ROOM DETAILS

DRAWN BY	CHECKED	DATE	SHEET NO
TW	TI	OCT-2015	A-4.41
JOB No. BS1505		SCALE VARIES	

Filename: I:\Projects\BestSeller\Bestseller_Dept_Store\BS1505_Polo Park\3- CD\A-Current\BS1505-A440.dwg Plotted: 11/25/2015 9:56 AM Plotted by: Mario Muccino

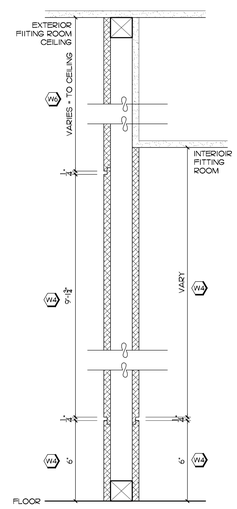

B SECTION - **SIDE WALLS**
3" = 1'-0"

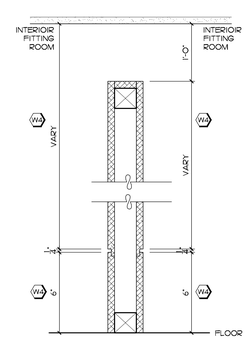

A SECTION - **CENTER WALLS**
3" = 1'-0"

5 DETAIL - **WALLS**
A-4.42
3" = 1'-0"

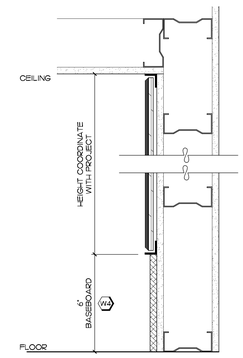

C SECTION - **MIRROR**
3" = 1'-0"

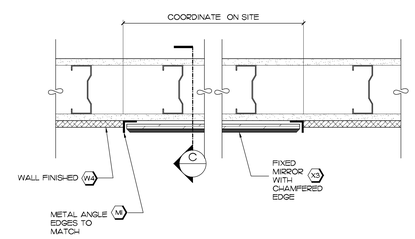

B PLAN - **MIRROR**
3" = 1'-0"

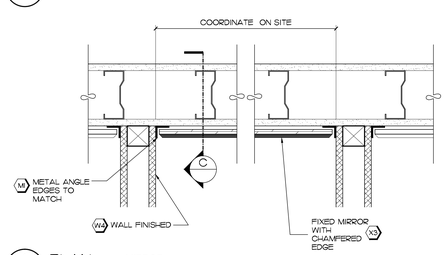

A PLAN - **MIRROR**
3" = 1'-0"

4 DETAIL - **MIRRORS**
A-4.42
3" = 1'-0"

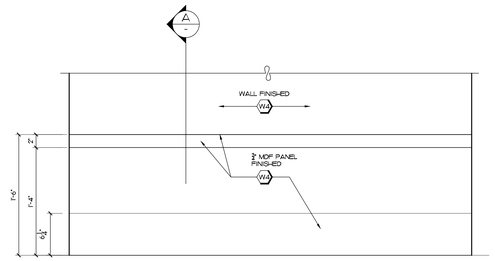

C ELEVATION
1 1/2" = 1'-0"

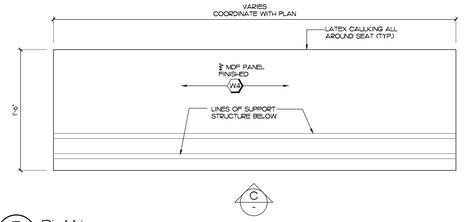

B PLAN
1 1/2" = 1'-0"

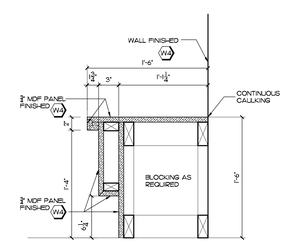

A SECTION
1 1/2" = 1'-0"

3 DETAIL - **H.C. BENCH**
A-4.42
1 1/2" = 1'-0"

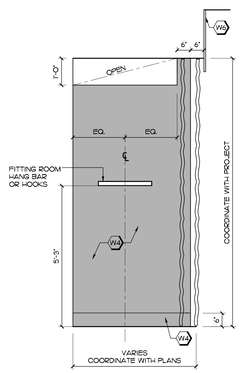

2 ELEVATION - **Barrier-free Fitting Room** TYPICAL
A-4.42
1/2" = 1'-0"

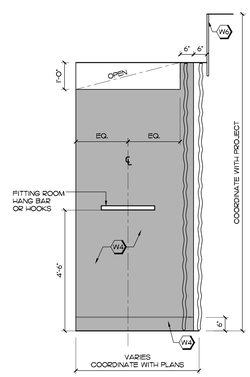

1 ELEVATION - **Barrier-free Fitting Room** TYPICAL
A-4.42
1/2" = 1'-0"

COPYRIGHT NOTICE
COPYRIGHT IN THESE DOCUMENTS BELONGS TO LODA INC. AND/OR RENE TRINGALI ARCHITECT. THESE DOCUMENTS MAY NOT BE REPURPOSED TO OTHERS, TRANSMITTED, DOWNLOADED OR REPRODUCED IN ANY FORMAT, WHETHER PRINT OR ELECTRONIC WITHOUT THE EXPRESS, WRITTEN PERMISSION OF THE COPYRIGHT OWNER.

DISCLAIMER
USE OF THESE DOCUMENTS IS AT THE USER'S OWN RISK. THE USER SHALL INDEMNIFY AND SAVE HARMLESS LODA INC., AND THEIR EMPLOYEES, AGENTS AND CONSULTANTS FROM AND AGAINST ALL CLAIMS, LOSSES, DEMANDS, COSTS AND EXPENSES (INCLUDING LEGAL FEES), DAMAGES OR RECOVERIES (INCLUDING ANY AMOUNTS PAID IN SETTLEMENT) ARISING BY REASON OF, CAUSED, OR ALLEGED TO BE CAUSED, BY THE USER'S RELIANCE ON THESE DOCUMENTS.

LODA DESIGN
L.O.D.A. inc.
1200 de Louvain Ouest, Montreal, Quebec, Canada H4N 1G5
(t) 514.382.0571 www.lodadesign.com

No	DATE	REVISIONS	BY
-	24-11-2015	ISSUED FOR CONSTRUCTION	TW
-	24-11-2015	ISSUED FOR PERMIT	TW
-	17-11-2015	ISSUED TO CLIENT - FIRST SET	TW
-	17-11-2015	ISSUED TO LANDLORD - FOR APPROVAL	TW
-	17-11-2015	ISSUED TO ENGINEER - FINAL SET	TW
-	02-11-2015	ISSUED TO ENGINEER - FIRST SET	TW

BESTSELLER

225-A DE LIEGE OUEST
MONTREAL, QUEBEC, H2P 1H4

JOB
POLO PARK - CF
1485 PORTAGE AVENUE
WINNIPEG, MANITOBA, R3G 0W4
C.R.U. NO: 304 & 305

SHEET TITLE
FITTING ROOM DETAILS

DRAWN BY	CHECKED	DATE	SHEET NO
TW	TI	OCT-2015	A-4.42
JOB No. BSI505		SCALE VARIES	

Filename: I:\Projects\BestSeller\Bestseller_Dept_Store\BS1505_Polo Park\3- CD\A-Current\BS1505-A440.dwg Plotted: 11/25/2015 9:56 AM Plotted by: Mario Muccino

WASHROOM SCHEDULE	
No.	Description
1	24" GRAB BAR W/ ANTI-SLIP FINISH BY "BOBRICK" MODEL NO: B-6806.99 (OR EQUIV.)
2	36" STRAIGHT GRAB BAR W/ ANTI-SLIP FINISH BY "BOBRICK"
3	TOILET BY "AMERICA STANDARD", CADET SERIES, MODEL NO: 2377.001 (OR EQUIV.)
4	RECESSED PAPER DISPENSER W/ GARBAGE BY "BOBRICK", MODEL NO: B-3944 (OR EQUIV.)
5	SINK BY "AMERICAN STANDARD" WALL MOUNTED, MODEL NO: 9141.011 (OR EQUIV.) "WHEELCHAIR SINK"
6	-FAUCET BY "CHICAGO FAUCETS", MODEL NO: 802-V-317-XK (OR EQUIV.) -DRAIN BY "MCGUIRE", MODEL NO: 155WC -SINK SUPPORT BY "MCGUIRE", MODEL NO: 0700-2-27
7	STAINLESS STEEL SHELF BY "BOBRICK" MODEL NO: B-295-24 (OR EQUIV.)
8	WALL MOUNTED LIQUID SOAP DISPENSER BY "BOBRICK", MODEL NO: B2112 (OR EQUIV.)
9	TILT MIRROR W/ STAINLESS STEEL FRAME BY "BOBRICK" MODEL NO: B-293 1830 (OR EQUIV.)
10	SINGLE ROLL STAINLESS STEEL TOILET TISSUE DISPENSER BY "BOBRICK" MODEL NO: B-76857 (OR EQUIV.)
11	SURFACE MOUNTED UTILITY HOOK BY "BOBRICK" MODEL NO: B-6707 (OR EQUIV.)

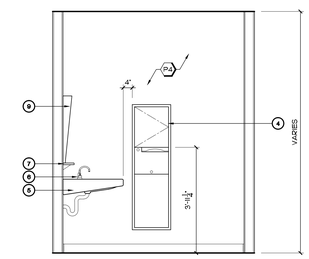

5 ELEVATION -Washroom
1/2" = 1'-0"

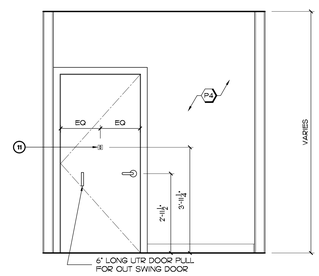

4 ELEVATION -Washroom
1/2" = 1'-0"

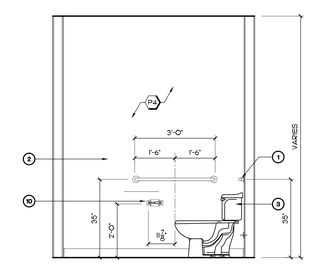

3 ELEVATION -Washroom
1/2" = 1'-0"

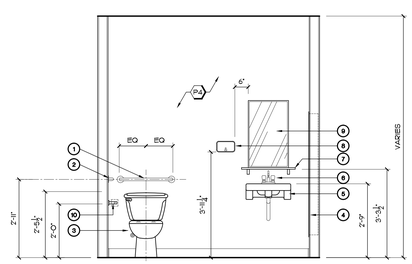

2 ELEVATION -Washroom
1/2" = 1'-0"

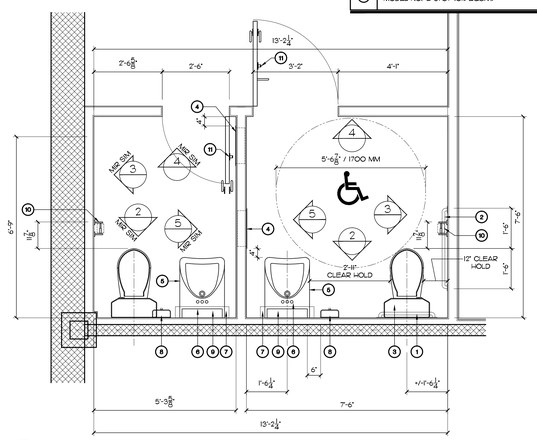

1 PLAN -Washrooms
1/2" = 1'-0"

A DETAIL - WASHROOM DETAILS
A-4.50
1/2" = 1'-0"

LODA
DESIGN

L.O.D.A. inc.
1200 de Louvain Ouest, Montreal, Quebec, Canada H4N 1G5
(t) 514.382.0571 www.lodadesign.com

COPYRIGHT NOTICE

COPYRIGHT IN THESE DOCUMENTS BELONGS TO LODA INC. AND/OR RENE TRINGALI ARCHITECT. THESE DOCUMENTS MAY NOT BE DISCLOSED TO OTHERS, TRANSMITTED, DOWNLOADED OR REPRODUCED IN ANY FORMAT, WHETHER PRINT OR ELECTRONIC WITHOUT THE EXPRESS, WRITTEN PERMISSION OF THE COPYRIGHT OWNER.

DISCLAIMER

USE OF THESE DOCUMENTS IS AT THE USER'S OWN RISK. THE USER SHALL INDEMNIFY AND SAVE HARMLESS LODA INC., AND THEIR EMPLOYEES, AGENTS AND CONSULTANTS FROM AND AGAINST ALL CLAIMS, LOSSES, DEMANDS, COSTS AND EXPENSES (INCLUDING LEGAL FEES), DAMAGES OR RECOVERIES (INCLUDING ANY AMOUNTS PAID IN SETTLEMENT) ARISING BY REASON OF, CAUSED, OR ALLEGED TO BE CAUSED, BY THE USER'S RELIANCE ON THESE DOCUMENTS.

No	DATE	REVISIONS	BY
-	24-11-2015	ISSUED FOR CONSTRUCTION	TW
-	24-11-2015	ISSUED FOR PERMIT	TW
-	17-11-2015	ISSUED TO CLIENT - FIRST SET	TW
-	17-11-2015	ISSUED TO LANDLORD - FOR APPROVAL	TW
-	17-11-2015	ISSUED TO ENGINEER - FINAL SET	TW
-	02-11-2015	ISSUED TO ENGINEER - FIRST SET	TW

BESTSELLER

225-A DE LIEGE OUEST
MONTREAL, QUEBEC, H2P 1H4

JOB
POLO PARK - CF
1485 PORTAGE AVENUE
WINNIPEG, MANITOBA, R3G 0W4
C.R.U. NO: 304 & 305

SHEET TITLE
WASHROOM DETAILS

DRAWN BY	CHECKED	DATE	SHEET NO
TW	TI	OCT-2015	A-4.50
JOB No. BSI505		SCALE 1/2"=1'-0"	

Filename: I:\Projects\BestSeller\Bestseller_Dept_Store\BS1505_Polo Park\3- CD\A-Current\BS1505-A450.dwg Plotted: 11/25/2015 9:56 AM Plotted by: Mario Muccino

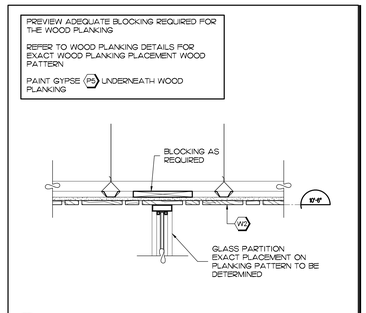

11 DETAIL A-5.10 - **CEILING TRANSITION** 1½" = 1'-0"

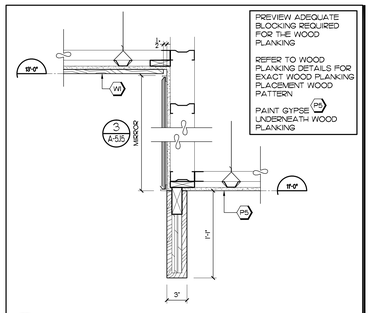

10 DETAIL A-5.10 - **CEILING TRANSITION** 1½" = 1'-0"

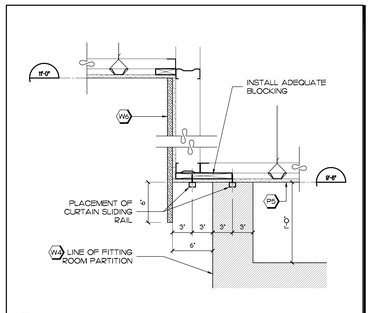

9 DETAIL A-5.10 - **CEILING TRANSITION** 1½" = 1'-0"

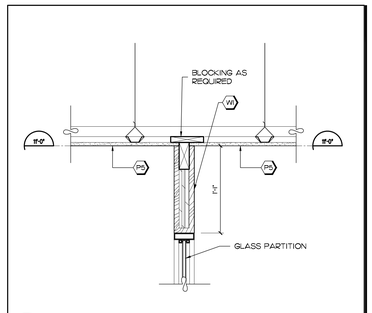

6 DETAIL A-5.10 - **CEILING TRANSITION** 1½" = 1'-0"

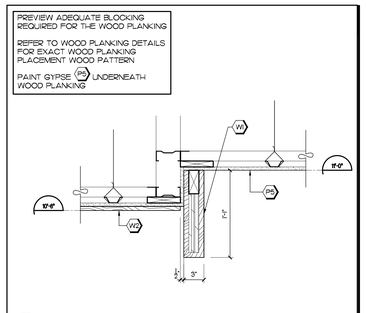

3 DETAIL A-5.10 - **CEILING TRANSITION** 1½" = 1'-0"

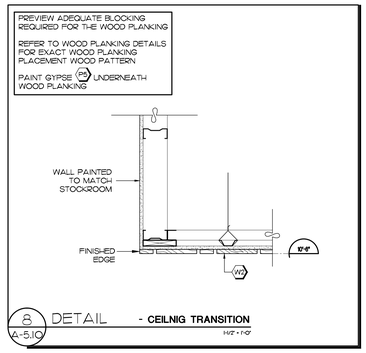

8 DETAIL A-5.10 - **CEILNIG TRANSITION** 1½" = 1'-0"

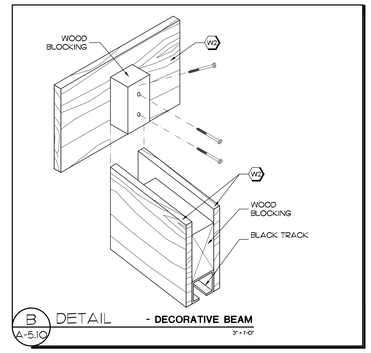

B DETAIL A-5.10 - **DECORATIVE BEAM** 3" = 1'-0"

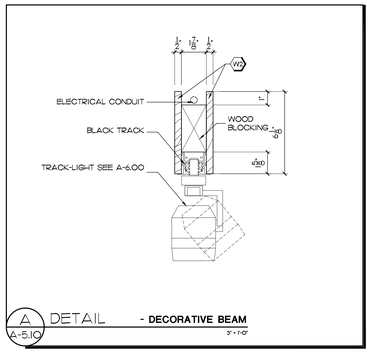

A DETAIL A-5.10 - **DECORATIVE BEAM** 3" = 1'-0"

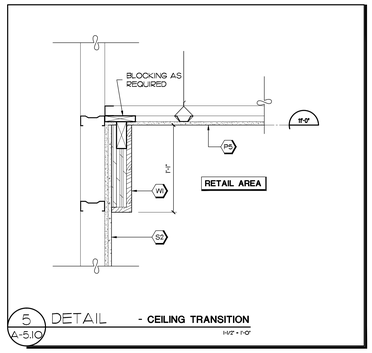

5 DETAIL A-5.10 - **CEILING TRANSITION** 1½" = 1'-0"

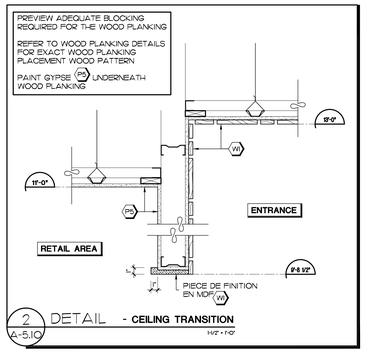

2 DETAIL A-5.10 - **CEILING TRANSITION** 1½" = 1'-0"

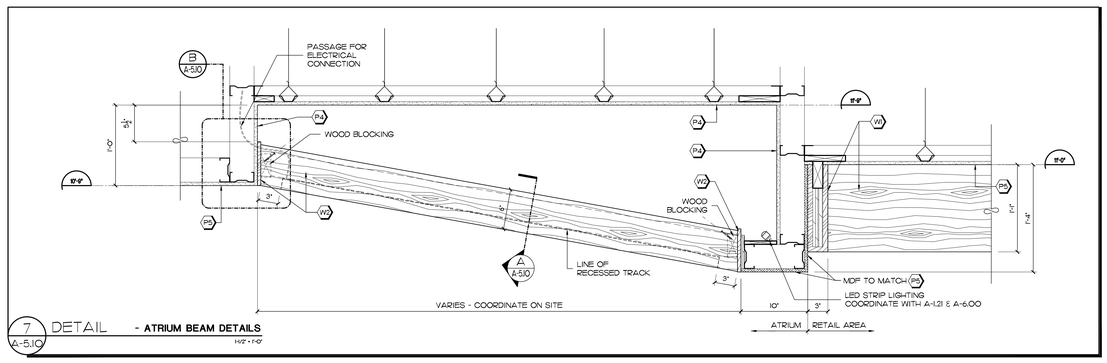

7 DETAIL A-5.10 - **ATRIUM BEAM DETAILS** 1½" = 1'-0"

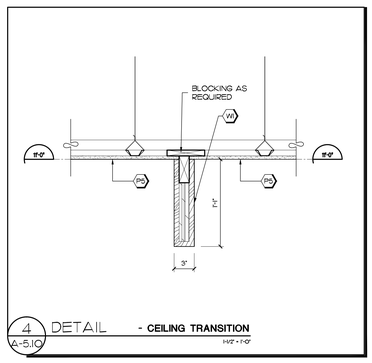

4 DETAIL A-5.10 - **CEILING TRANSITION** 1½" = 1'-0"

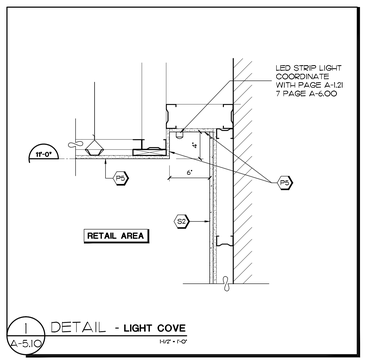

1 DETAIL A-5.10 - **LIGHT COVE** 1½" = 1'-0"

LODA DESIGN

L.O.D.A inc.
1200 de Louvain Ouest, Montreal, Quebec, Canada H4N 1G5
(t) 514.382.0571 www.lodadesign.com

COPYRIGHT NOTICE

COPYRIGHT IN THESE DOCUMENTS BELONGS TO LODA INC. AND/OR RENE TRINGALI ARCHITECT. THESE DOCUMENTS MAY NOT BE FORWARDED TO OTHERS, TRANSMITTED, DOWNLOADED OR REPRODUCED IN ANY FORMAT, WHETHER PRINT OR ELECTRONIC WITHOUT THE EXPRESS, WRITTEN PERMISSION OF THE COPYRIGHT OWNER.

DISCLAIMER

USE OF THESE DOCUMENTS IS AT THE USER'S OWN RISK. THE USER SHALL INDEMNIFY AND SAVE HARMLESS LODA INC., AND THEIR EMPLOYEES, AGENTS AND CONSULTANTS FROM AND AGAINST ALL CLAIMS, LOSSES, DAMAGES, ACTIONS, CAUSES OF ACTION, SUITS, DEMANDS, FEES, CHARGES OR REQUESTS (INCLUDING ANY AMOUNTS PAID IN SETTLEMENT) ARISING BY REASON OF, CAUSED, OR ALLEGED TO BE CAUSED, BY THE USER'S RELIANCE ON THESE DOCUMENTS.

No	DATE	REVISIONS	BY
-	24-11-2015	ISSUED FOR CONSTRUCTION	TW
-	24-11-2015	ISSUED FOR PERMIT	TW
-	17-11-2015	ISSUED TO CLIENT - FIRST SET	TW
-	17-11-2015	ISSUED TO LANDLORD - FOR APPROVAL	TW
-	17-11-2015	ISSUED TO ENGINEER - FINAL SET	TW
-	02-11-2015	ISSUED TO ENGINEER - FIRST SET	TW

BESTSELLER

225-A DE LIEGE OUEST
MONTREAL, QUEBEC, H2P 1H4

JOB
POLO PARK - CF
1455 PORTAGE AVENUE
WINNIPEG, MANITOBA, R3G 0W4
CRLL NO/ 304 & 305

SHEET TITLE
CONSTRUCTION DETAILS - CEILING

DRAWN BY	CHECKED	DATE	SHEET NO
TW	TI	OCT-2015	A-5.10
JOB No. BS1505		SCALE VARIES	

Filename: I:\Projects\BestSeller\Bestseller_Dept_Store\BS1505_Polo Park\3- CD\A-Current\BS1505-A510.dwg Plotted: 11/25/2015 9:57 AM Plotted by: Mario Muccino

PREVIEW ADEQUATE BLOCKING REQUIRED FOR THE LIGHT FIXTURES

SUSPENDED LIGHTS TO BE ANCHORED TO AVOID MOVEMENT

G.C. IS RESPONSIBLE TO ENSURE PROPER SUSPENSION OF STOCKROOM FIXTURES

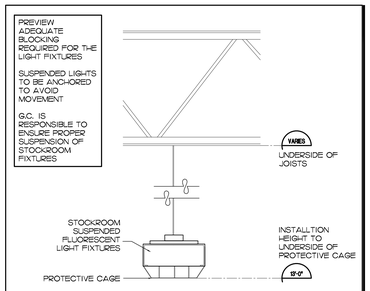

6 A-5.11 DETAIL - **STOCKROOM LIGHTING**
1-1/2" = 1'-0"

PREVIEW ADEQUATE BLOCKING REQUIRED FOR THE WOOD PLANKING

REFER TO WOOD PLANKING DETAILS FOR EXACT WOOD PLANKING PLACEMENT WOOD PATTERN

PAINT GYPSE PB UNDERNEATH WOOD PLANKING

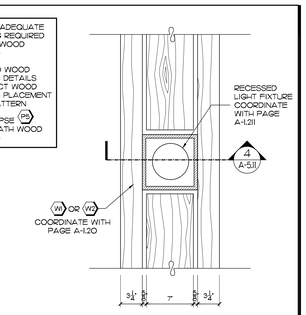

3 A-5.11 DETAIL - **RECESSED LIGHT FIXTURE**
1-1/2" = 1'-0"

PREVIEW ADEQUATE BLOCKING REQUIRED FOR THE LIGHT FIXTURES

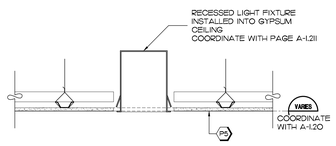

5 A-5.11 DETAIL - **RECESSED LIGHT FIXTURE**
1-1/2" = 1'-0"

PREVIEW ADEQUATE BLOCKING REQUIRED FOR THE WOOD PLANKING

REFER TO WOOD PLANKING DETAILS FOR EXACT WOOD PLANKING PLACEMENT WOOD PATTERN

PAINT GYPSE PB UNDERNEATH WOOD PLANKING

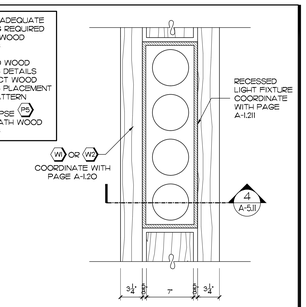

2 A-5.11 DETAIL - **RECESSED LIGHT FIXTURE**
1-1/2" = 1'-0"

PREVIEW ADEQUATE BLOCKING REQUIRED FOR THE WOOD PLANKING

REFER TO WOOD PLANKING DETAILS FOR EXACT WOOD PLANKING PLACEMENT WOOD PATTERN

PAINT GYPSE PB UNDERNEATH WOOD PLANKING

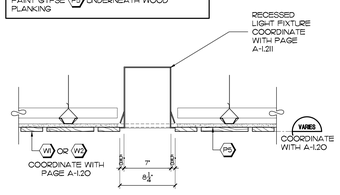

4 A-5.11 DETAIL - **RECESSED LIGHT FIXTURE**
1-1/2" = 1'-0"

PREVIEW ADEQUATE BLOCKING REQUIRED FOR THE WOOD PLANKING

REFER TO WOOD PLANKING DETAILS FOR EXACT WOOD PLANKING PLACEMENT WOOD PATTERN

PAINT GYPSE PB UNDERNEATH WOOD PLANKING

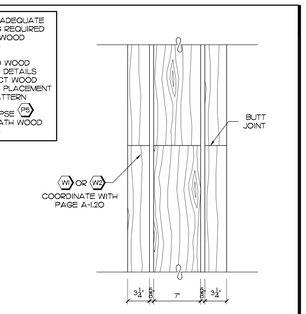

1 A-5.11 DETAIL - **WOOD PLANKING JOINTS**
1-1/2" = 1'-0"

LODA DESIGN

L.O.D.A inc.
1200 de Louvain Ouest, Montreal, Quebec, Canada H4N 1G5
(t) 514.382.0571 www.lodadesign.com

COPYRIGHT NOTICE

COPYRIGHT IN THESE DOCUMENTS BELONGS TO LODA INC. AND/OR RENE TRINGALI ARCHITECT. THESE DOCUMENTS MAY NOT BE FORWARDED TO OTHERS, TRANSMITTED, DOWNLOADED OR REPRODUCED IN ANY FORMAT, WHETHER PRINT OR ELECTRONIC WITHOUT THE EXPRESS, WRITTEN PERMISSION OF THE COPYRIGHT OWNER.

DISCLAIMER

USE OF THESE DOCUMENTS IS AT THE USER'S OWN RISK. THE USER SHALL INDEMNIFY AND SAVE HARMLESS LODA INC., AND THEIR EMPLOYEES, AGENTS AND CONSULTANTS FROM AND AGAINST ALL CLAIMS, LIABILITIES, LOSSES, DAMAGES, COSTS (INCLUDING LEGAL AND EXPERT FEES), DAMAGES OR RECOVERIES (INCLUDING ANY AMOUNTS PAID IN SETTLEMENT) ARISING BY REASON OF, CAUSED, OR ALLEGED TO BE CAUSED, BY THE USER'S RELIANCE ON THESE DOCUMENTS.

No	DATE	REVISIONS	BY
-	24-11-2015	ISSUED FOR CONSTRUCTION	TW
-	24-11-2015	ISSUED FOR PERMIT	TW
-	17-11-2015	ISSUED TO CLIENT - FIRST SET	TW
-	17-11-2015	ISSUED TO LANDLORD - FOR APPROVAL	TW
-	17-11-2015	ISSUED TO ENGINEER - FINAL SET	TW
-	02-11-2015	ISSUED TO ENGINEER - FIRST SET	TW

BESTSELLER

225-A DE LIEGE OUEST
MONTREAL, QUEBEC, H2P 1H4

JOB
POLO PARK - CF
1455 PORTAGE AVENUE
WINNIPEG, MANITOBA, R3G 0W4
CRLL NO/ 304 & 305

SHEET TITLE
CONSTRUCTION DETAILS

DRAWN BY	CHECKED	DATE	SHEET NO
TW	TI	OCT-2015	A-5.11
JOB No. BS1505		SCALE VARIES	

Filename: I:\Projects\BestSeller\Bestseller_Dept_Store\BS1505_Polo Park\3- CD\A-Current\BS1505-A510.dwg Plotted: 11/25/2015 9:57 AM Plotted by: Mario Muccino

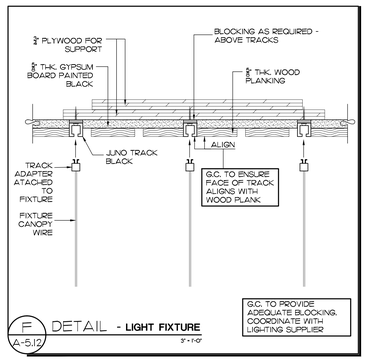

F A-5.12 DETAIL - LIGHT FIXTURE 3" = 1'-0"

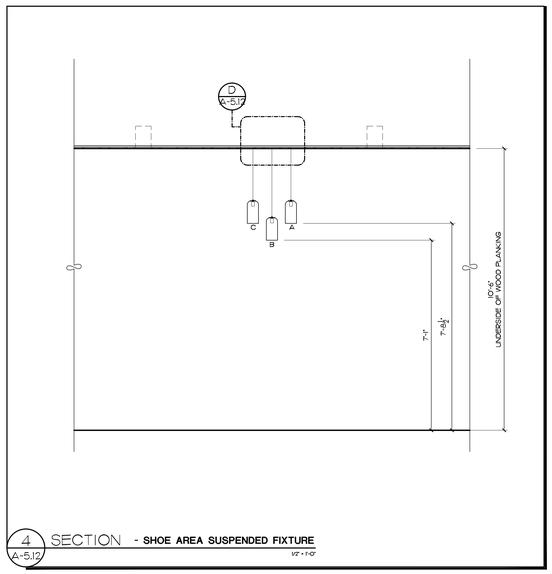

4 A-5.12 SECTION - SHOE AREA SUSPENDED FIXTURE 1/2" = 1'-0"

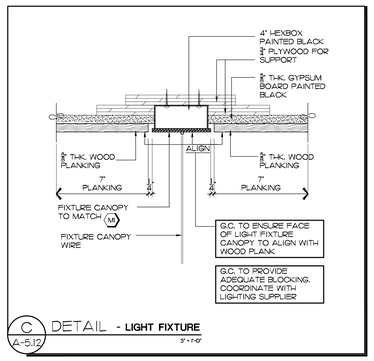

C A-5.12 DETAIL - LIGHT FIXTURE 3" = 1'-0"

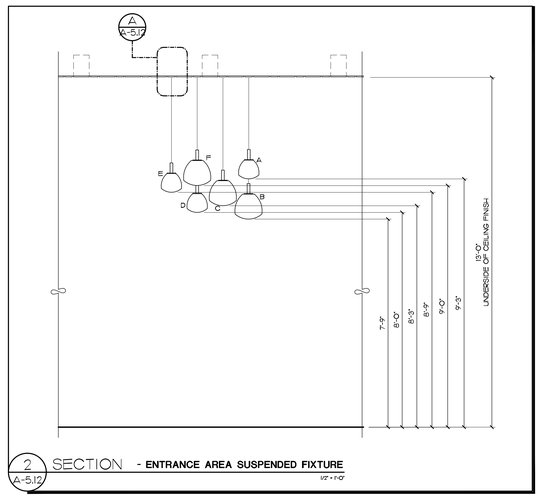

2 A-5.12 SECTION - ENTRANCE AREA SUSPENDED FIXTURE 1/2" = 1'-0"

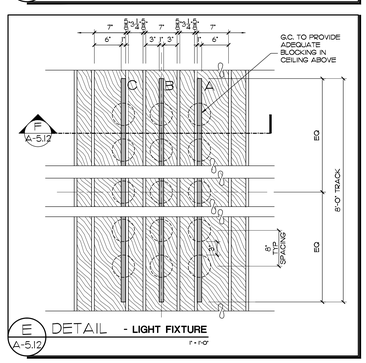

E A-5.12 DETAIL - LIGHT FIXTURE 1" = 1'-0"

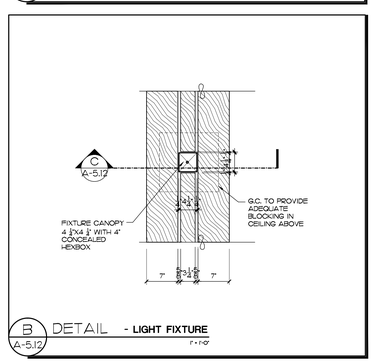

B A-5.12 DETAIL - LIGHT FIXTURE 1" = 1'-0"

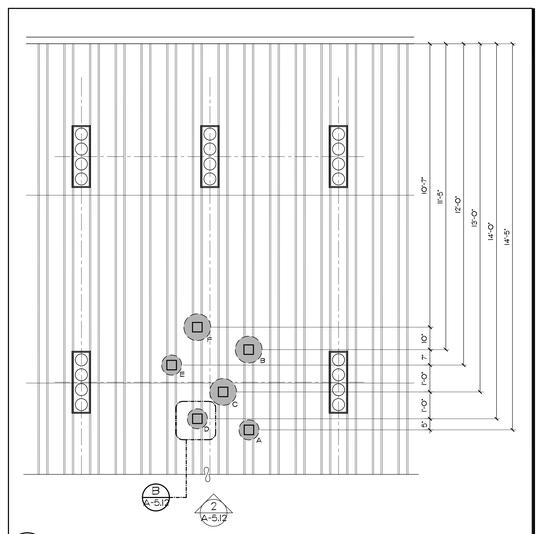

1 A-5.12 PLAN - ENTRANCE AREA SUSPENDED FIXTURE 1/2" = 1'-0"

ROW A	11 UNITS
ROW B	11 UNITS
ROW C	11 UNITS

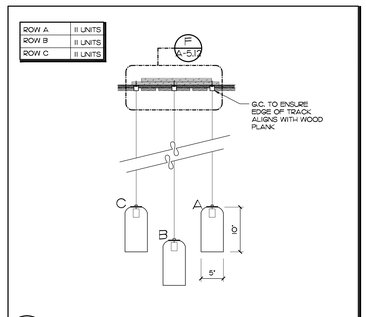

D A-5.12 DETAIL - LIGHT FIXTURE 1" = 1'-0"

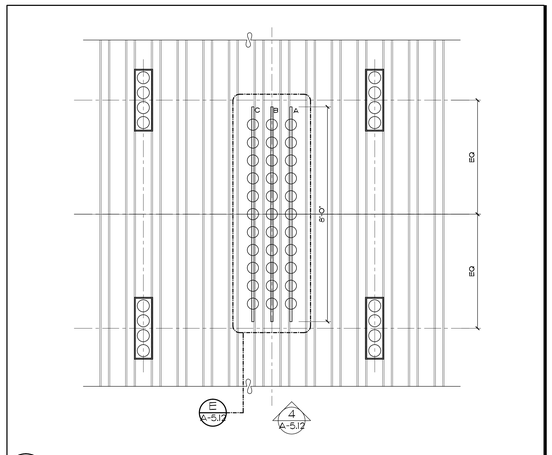

3 A-5.12 PLAN - SHOE AREA SUSPENDED FIXTURE 1/2" = 1'-0"

SMALL (9")	6
MEDIUM (12")	6
LARGE (15")	-

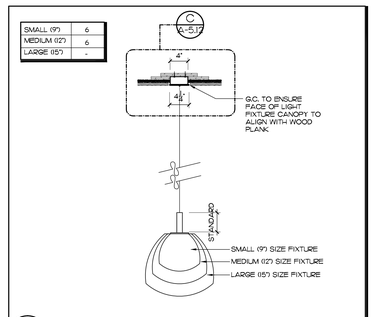

A A-5.12 DETAIL - LIGHT FIXTURE 1" = 1'-0"

LODA DESIGN

L.O.D.A inc.
1200 de Louvain Ouest, Montreal, Quebec, Canada H4N 1G5
(t) 514.382.0571 www.lodadesign.com

COPYRIGHT NOTICE

COPYRIGHT IN THESE DOCUMENTS BELONGS TO LODA INC. AND/OR RENE TRINGALI ARCHITECT. THESE DOCUMENTS MAY NOT BE FORWARDED TO OTHERS, TRANSMITTED, DOWNLOADED OR REPRODUCED IN ANY FORMAT, WHETHER PRINT OR ELECTRONIC WITHOUT THE EXPRESS, WRITTEN PERMISSION OF THE COPYRIGHT OWNER.

DISCLAIMER

USE OF THESE DOCUMENTS IS AT THE USER'S OWN RISK. THE USER SHALL INDEMNIFY AND SAVE HARMLESS LODA INC., AND THEIR EMPLOYEES, AGENTS AND CONSULTANTS FROM AND AGAINST ALL CLAIMS, LOSSES, DAMAGES, COSTS (INCLUDING LEGAL COSTS AND LEGAL FEES), DAMAGES OR RECOVERIES (INCLUDING ANY AMOUNTS PAID IN SETTLEMENT) ARISING BY REASON OF, CAUSED, OR ALLEGED TO BE CAUSED, BY THE USER'S RELIANCE ON THESE DOCUMENTS.

No	DATE	REVISIONS	BY
-	24-11-2015	ISSUED FOR CONSTRUCTION	TW
-	24-11-2015	ISSUED FOR PERMIT	TW
-	17-11-2015	ISSUED TO CLIENT - FIRST SET	TW
-	17-11-2015	ISSUED TO LANDLORD - FOR APPROVAL	TW
-	17-11-2015	ISSUED TO ENGINEER - FINAL SET	TW
-	02-11-2015	ISSUED TO ENGINEER - FIRST SET	TW

BESTSELLER

225-A DE LIEGE OUEST
MONTREAL, QUEBEC, H2P 1H4

JOB
POLO PARK - CF
1455 PORTAGE AVENUE
WINNIPEG, MANITOBA, R3G 0W4
CRU: NO/ 304 & 305

SHEET TITLE
CONSTRUCTION DETAILS - LIGHTING

DRAWN BY	CHECKED	DATE	SHEET NO
TW	TI	OCT-2015	A-5.12
JOB No. BS1505		SCALE VARIES	

Filename: I:\Projects\BestSeller\Bestseller_Dept_Store\BS1505_Polo Park\3- CD\A-Current\BS1505-A510.dwg Plotted: 11/25/2015 9:57 AM Plotted by: Mario Muccino

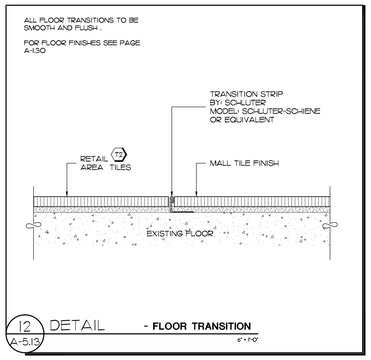

12 DETAIL A-5.13 - FLOOR TRANSITION 6" = 1'-0"

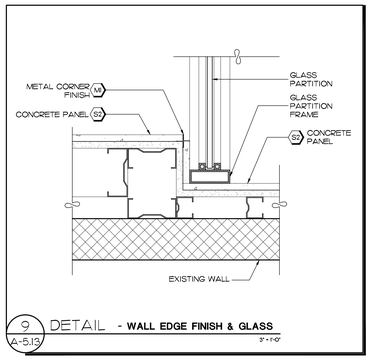

9 DETAIL A-5.13 - WALL EDGE FINISH & GLASS 3" = 1'-0"

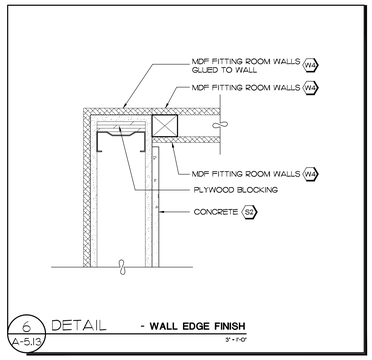

6 DETAIL A-5.13 - WALL EDGE FINISH 3" = 1'-0"

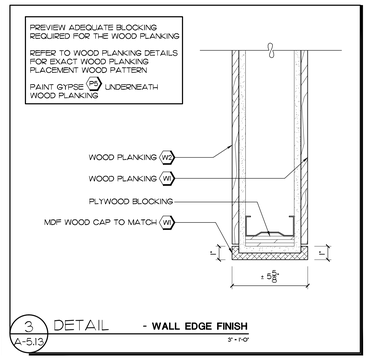

3 DETAIL A-5.13 - WALL EDGE FINISH 3" = 1'-0"

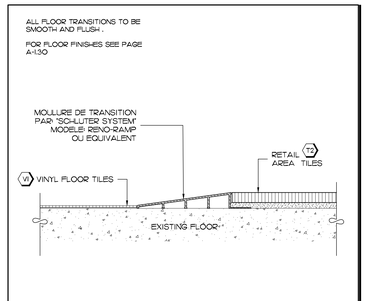

14 DETAIL A-5.13 - FLOOR TRANSITION 6" = 1'-0"

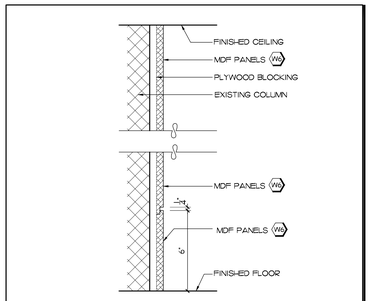

11 DETAIL A-5.13 - COLUMN 3" = 1'-0"

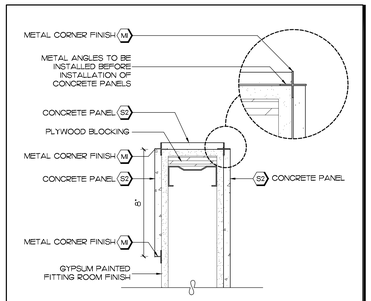

8 DETAIL A-5.13 - WALL EDGE FINISH 3" = 1'-0"

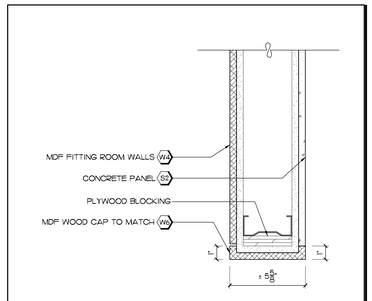

5 DETAIL A-5.13 - WALL EDGE FINISH 3" = 1'-0"

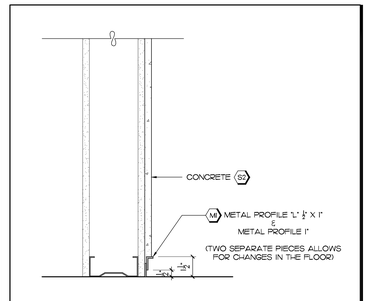

2 DETAIL A-5.13 - METAL BASEBOARD ON CONCRETE 3" = 1'-0"

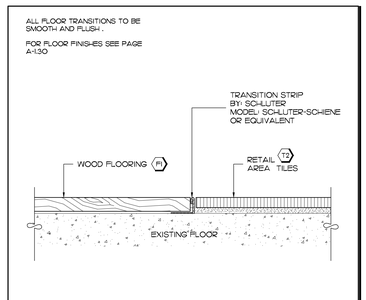

13 DETAIL A-5.13 - FLOOR TRANSITION 6" = 1'-0"

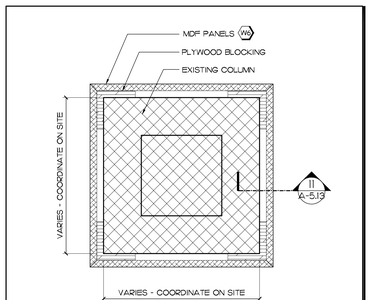

10 DETAIL A-5.13 - COLUMN FINISH 3" = 1'-0"

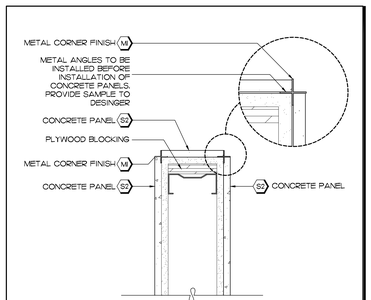

7 DETAIL A-5.13 - WALL EDGE FINISH 3" = 1'-0"

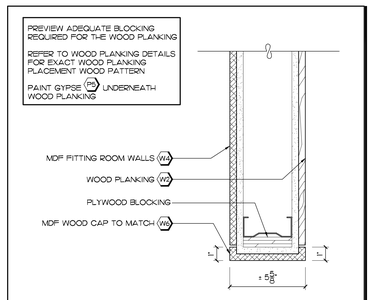

4 DETAIL A-5.13 - WALL EDGE FINISH 3" = 1'-0"

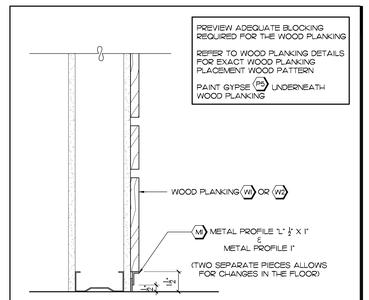

1 DETAIL A-5.13 - METAL BASEBOARD ON WOOD 3" = 1'-0"

LODA DESIGN

L.O.D.A inc.
1200 de Louvain Ouest, Montreal, Quebec, Canada H4N 1G5
(t) 514.382.0571 www.lodadesign.com

COPYRIGHT NOTICE

COPYRIGHT IN THESE DOCUMENTS BELONGS TO LODA INC. AND/OR RENE TRINGALI ARCHITECT. THESE DOCUMENTS MAY NOT BE FORWARDED TO OTHERS, TRANSMITTED, DOWNLOADED OR REPRODUCED IN ANY FORMAT, WHETHER PRINT OR ELECTRONIC WITHOUT THE EXPRESS, WRITTEN PERMISSION OF THE COPYRIGHT OWNER.

DISCLAIMER

USE OF THESE DOCUMENTS IS AT THE USER'S OWN RISK. THE USER SHALL INDEMNIFY AND SAVE HARMLESS LODA INC., AND THEIR EMPLOYEES, AGENTS AND CONSULTANTS FROM AND AGAINST ALL CLAIMS, LIABILITIES, LOSSES, COSTS, EXPENSES (INCLUDING LEGAL AND EXPERT FEES), DAMAGES OR RECOVERIES (INCLUDED ANY AMOUNTS PAID IN A SETTLEMENT) ARISING BY REASON OF, CAUSED, OR ALLEGED TO BE CAUSED, BY THE USER'S RELIANCE ON THESE DOCUMENTS.

No	DATE	REVISIONS	BY
-	24-11-2015	ISSUED FOR CONSTRUCTION	TW
-	24-11-2015	ISSUED FOR PERMIT	TW
-	17-11-2015	ISSUED TO CLIENT - FIRST SET	TW
-	17-11-2015	ISSUED TO LANDLORD - FOR APPROVAL	TW
-	17-11-2015	ISSUED TO ENGINEER - FINAL SET	TW
-	02-11-2015	ISSUED TO ENGINEER - FIRST SET	TW

BESTSELLER

225-A DE LIEGE OUEST
MONTREAL, QUEBEC, H2P 1H4

JOB
POLO PARK - CF
1455 PORTAGE AVENUE
WINNIPEG, MANITOBA, R3G 0W4
CRU: NO/ 304 & 305

SHEET TITLE
CONSTRUCTION DETAILS

DRAWN BY	CHECKED	DATE	SHEET NO
TW	TI	OCT-2015	A-5.13
JOB No. BS1505		SCALE VARIES	

Filename: I:\Projects\BestSeller\Bestseller_Dept_Store\BS1505_Polo Park\3- CD\A-Current\BS1505-A510.dwg Plotted: 11/25/2015 9:57 AM Plotted by: Mario Muccino

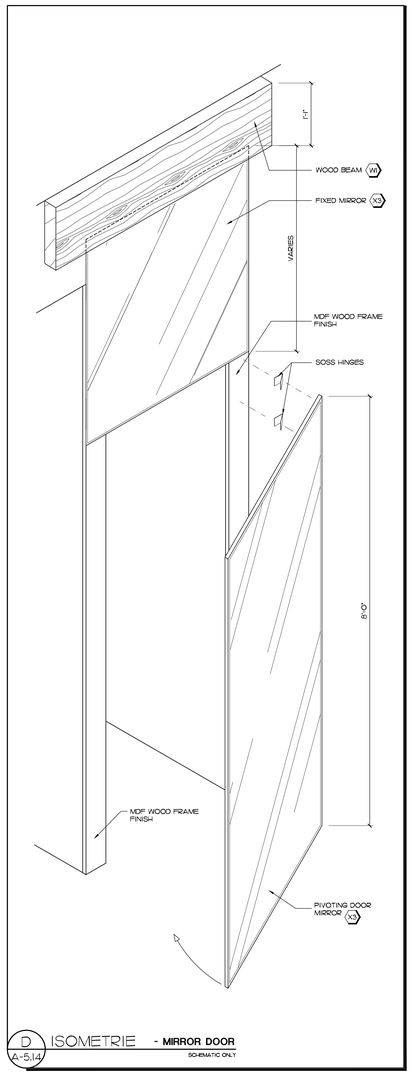

D A-5.14 ISOMETRIE - **MIRROR DOOR**
SCHEMATIC ONLY

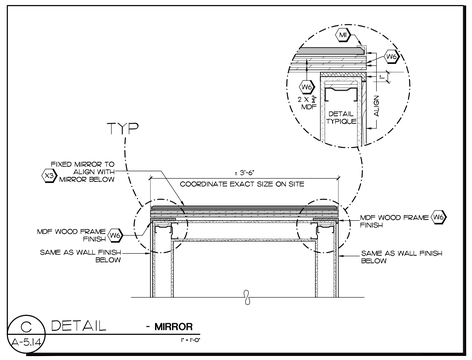

C A-5.14 DETAIL - **MIRROR**
1" = 1'-0"

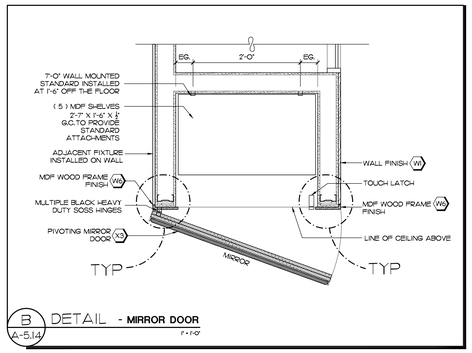

B A-5.14 DETAIL - **MIRROR DOOR**
1" = 1'-0"

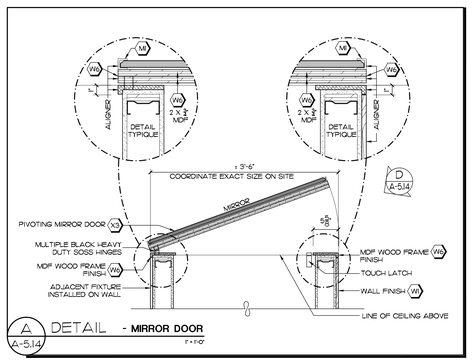

A A-5.14 DETAIL - **MIRROR DOOR**
1" = 1'-0"

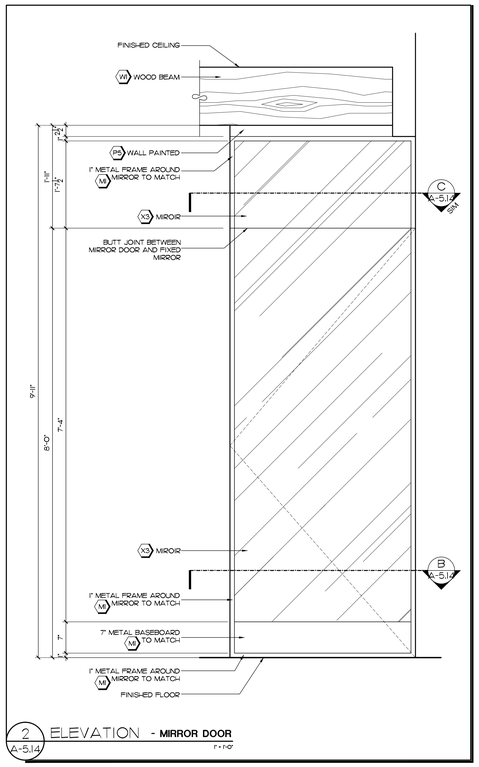

2 A-5.14 ELEVATION - **MIRROR DOOR**
1" = 1'-0"

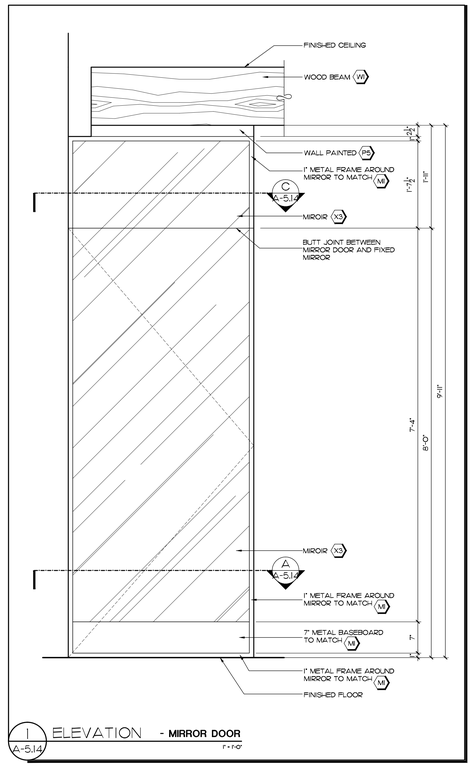

1 A-5.14 ELEVATION - **MIRROR DOOR**
1" = 1'-0"

LODA DESIGN

L.O.D.A inc.
1200 de Louvain Ouest, Montreal, Quebec, Canada H4N 1G5
(t) 514.382.0571 www.lodadesign.com

COPYRIGHT NOTICE

COPYRIGHT IN THESE DOCUMENTS BELONGS TO LODA INC. AND/OR RENE TRINGALI ARCHITECT. THESE DOCUMENTS MAY NOT BE FORWARDED OR REPRODUCED IN ANY FORM OR STORED OR REPRODUCED IN ANY FORMAT, WHETHER PRINT OR ELECTRONIC WITHOUT THE EXPRESS, WRITTEN PERMISSION OF THE COPYRIGHT OWNER.

DISCLAIMER

USE OF THESE DOCUMENTS IS AT THE USER'S OWN RISK. THE USER SHALL INDEMNIFY AND SAVE HARMLESS LODA INC., AND THEIR EMPLOYEES, AGENTS AND CONSULTANTS FROM AND AGAINST ALL CLAIMS, LOSSES, DEMANDS, COSTS AND EXPENSES (INCLUDING LEGAL FEES), DAMAGES OR RECOVERIES (INCLUDING ANY AMOUNTS PAID IN SETTLEMENT) ARISING BY REASON OF, CAUSED, OR ALLEGED TO BE CAUSED, BY THE USER'S RELIANCE ON THESE DOCUMENTS.

No	DATE	REVISIONS	BY
-	24-11-2015	ISSUED FOR CONSTRUCTION	TW
-	24-11-2015	ISSUED FOR PERMIT	TW
-	17-11-2015	ISSUED TO CLIENT - FIRST SET	TW
-	17-11-2015	ISSUED TO LANDLORD - FOR APPROVAL	TW
-	17-11-2015	ISSUED TO ENGINEER - FINAL SET	TW
-	02-11-2015	ISSUED TO ENGINEER - FIRST SET	TW

BESTSELLER

225-A DE LIEGE OUEST
MONTREAL, QUEBEC, H2P 1H4

JOB
POLO PARK - CF
1485 PORTAGE AVENUE
WINNIPEG, MANITOBA, R3G 0W4
C.R.U. NO.: 304 & 305

SHEET TITLE
CONSTRUCTION DETAILS - MIRRORS

DRAWN BY	CHECKED	DATE	SHEET NO
TW	TI	OCT-2015	A-5.14
JOB No. BS1505		SCALE VARIES	

Filename: I:\Projects\BestSeller\Bestseller_Dept_Store\BS1505_Polo Park\3- CD\A-Current\BS1505-A510.dwg Plotted: 11/25/2015 9:57 AM Plotted by: Mario Muccino

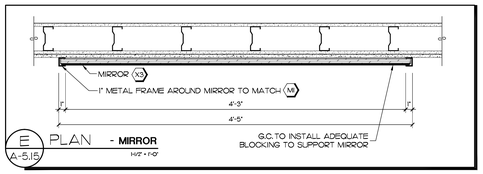

E A-5.15 PLAN - **MIRROR**
1½" = 1'-0"

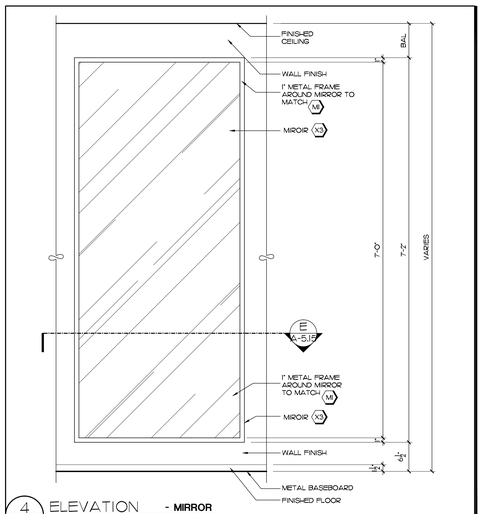

4 A-5.15 ELEVATION - **MIRROR**
1" = 1'-0"

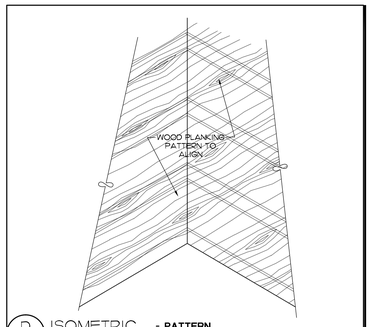

D A-5.15 ISOMETRIC - **PATTERN**
NO SCALE

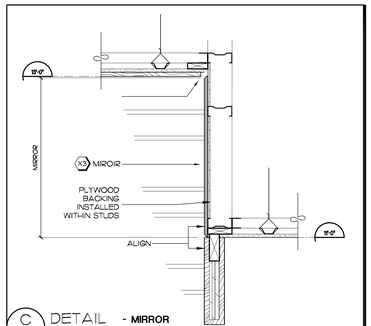

C A-5.15 DETAIL - **MIRROR**
1½" = 1'-0"

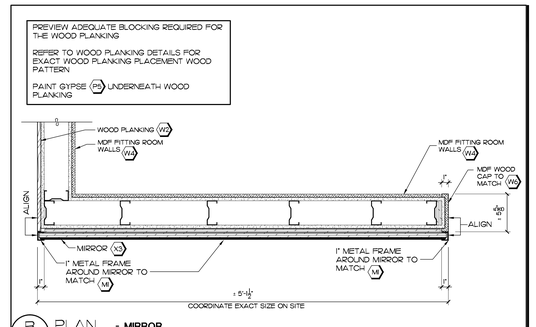

B A-5.15 PLAN - **MIRROR**
1½" = 1'-0"

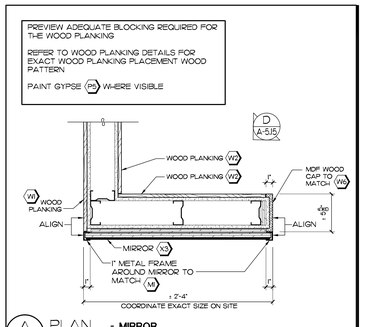

A A-5.15 PLAN - **MIRROR**
1½" = 1'-0"

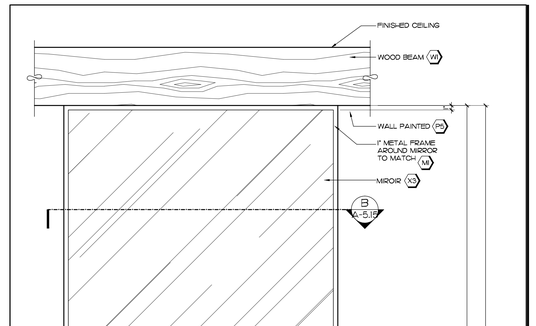

2 A-5.15 ELEVATION - **MIRROR**
1" = 1'-0"

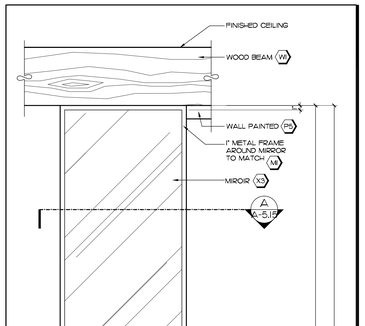

1 A-5.15 ELEVATION - **MIRROR**
1" = 1'-0"

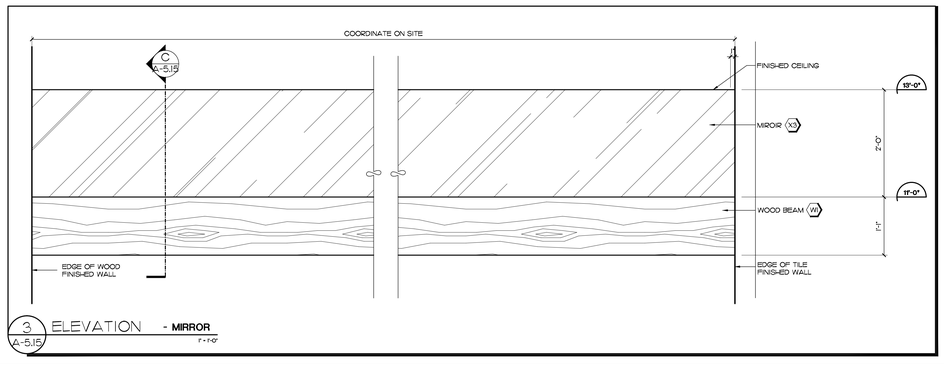

3 A-5.15 ELEVATION - **MIRROR**
1" = 1'-0"

LODA DESIGN
L.O.D.A inc.
1200 de Louvain Ouest, Montreal, Quebec, Canada H4N 1G5
(t) 514.382.0571 www.lodadesign.com

COPYRIGHT NOTICE
COPYRIGHT IN THESE DOCUMENTS BELONGS TO LODA INC. AND/OR RENE TRINGALI ARCHITECT. THESE DOCUMENTS MAY NOT BE FORWARDED TO OTHERS, TRANSMITTED, DOWNLOADED OR REPRODUCED IN ANY FORMAT, WHETHER PRINT OR ELECTRONIC WITHOUT THE EXPRESS, WRITTEN PERMISSION OF THE COPYRIGHT OWNER.

DISCLAIMER
USE OF THESE DOCUMENTS IS AT THE USER'S OWN RISK. THE USER SHALL INDEMNIFY AND SAVE HARMLESS LODA INC., AND THEIR EMPLOYEES, AGENTS AND CONSULTANTS FROM AND AGAINST ALL CLAIMS, LOSSES, DEMANDS, COSTS AND EXPENSES (INCLUDING LEGAL FEES), INCLUDING ANY DAMAGES OR ANY AMOUNT PAID IN ANY SETTLEMENT) ARISING BY REASON OF, CAUSED, OR ALLEGED TO BE CAUSED, BY THE USER'S RELIANCE ON THESE DOCUMENTS.

No	DATE	REVISIONS	BY
-	24-11-2015	ISSUED FOR CONSTRUCTION	TW
-	24-11-2015	ISSUED FOR PERMIT	TW
-	17-11-2015	ISSUED TO CLIENT - FIRST SET	TW
-	17-11-2015	ISSUED TO LANDLORD - FOR APPROVAL	TW
-	17-11-2015	ISSUED TO ENGINEER - FINAL SET	TW
-	02-11-2015	ISSUED TO ENGINEER - FIRST SET	TW

BESTSELLER

225-A DE LIEGE OUEST
MONTREAL, QUEBEC, H2P 1H4

JOB
POLO PARK - OF
1485 PORTAGE AVENUE
WINNIPEG, MANITOBA, R3G 0W4
C.R.U. NO/ 304 & 305

SHEET TITLE
CONSTRUCTION DETAILS - MIRRORS

DRAWN BY	CHECKED	DATE	SHEET NO
TW	TI	OCT-2015	A-5.15
JOB No. BS1505	SCALE VARIES		

Filename: I:\Projects\BestSeller\Bestseller_Dept_Store\BS1505_Polo Park\3- CD\A-Current\BS1505-A510.dwg Plotted: 11/25/2015 9:57 AM Plotted by: Mario Muccino

WOOD PLANKING - GENERAL NOTE

- PREVIEW ADEQUATE BLOCKING REQUIRED FOR WOOD PLANKING
- WOOD TO BE (W) OR (WW) COORDINATE WITH ELEVATIONS A-210 & A-211 AND CEILING PLAN A-130 FOR FINISH
- WOOD PLANKING TO BE NAILED DIRECTLY TO GYPSUM BOARD, ALL NAIL HEADS AND HOLES TO BE PUTTIED AND PAINTED TO MATCH WOOD FINISH
- ALL EXPOSED EDGES OF WOOD PLANKING TO BE FINISHED TO MATCH

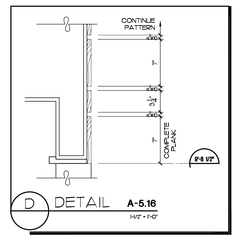

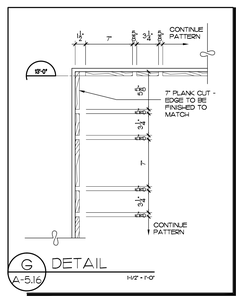

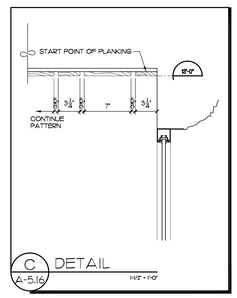

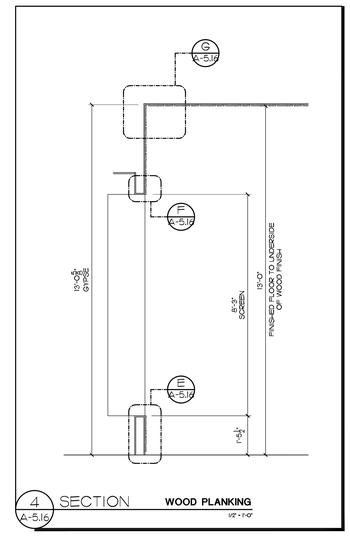

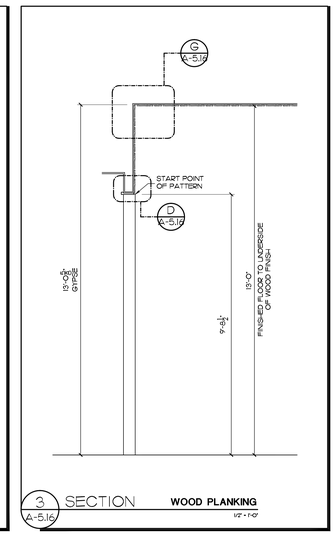

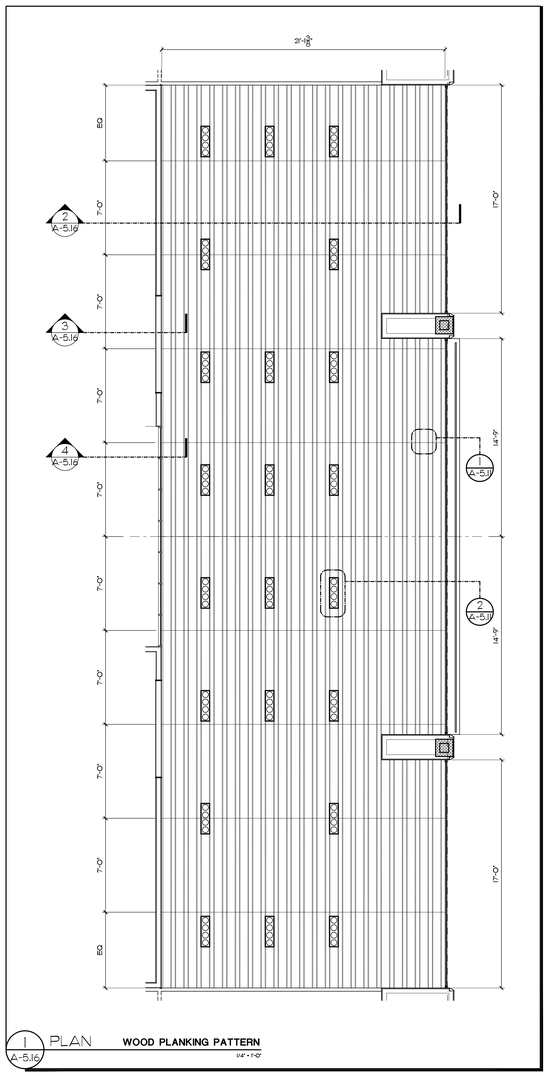

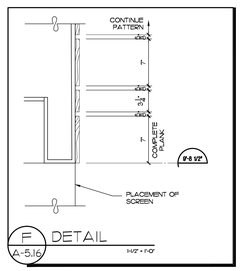

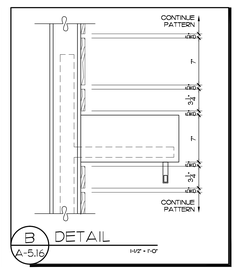

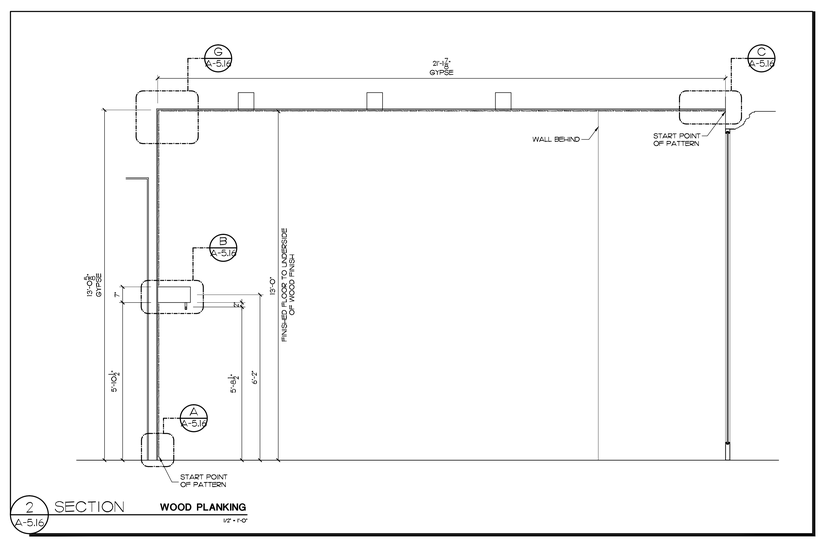

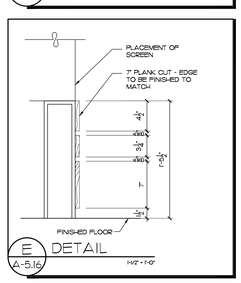

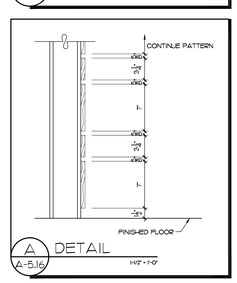

LODA DESIGN
L.O.D.A. inc.
1200 de Louvain Ouest, Montreal, Quebec, Canada H4N 1G5
(t) 514.382.0571 www.lodadesign.com

COPYRIGHT NOTICE

COPYRIGHT IN THESE DOCUMENTS BELONGS TO LODA INC. AND/OR RENE TRINGALI ARCHITECT. THESE DOCUMENTS MAY NOT BE REGARDED TO OTHERS, TRANSMITTED, DOWNLOADED OR REPRODUCED IN ANY FORMAT, WHETHER PRINT OR ELECTRONIC WITHOUT THE EXPRESS, WRITTEN PERMISSION OF THE COPYRIGHT OWNER.

DISCLAIMER

USE OF THESE DOCUMENTS IS AT THE USER'S OWN RISK. THE USER SHALL INDEMNIFY AND SAVE HARMLESS LODA INC., AND THEIR EMPLOYEES, AGENTS AND CONSULTANTS FROM AND AGAINST ALL CLAIMS, LOSSES, DEMANDS, COSTS AND EXPENSES (INCLUDING LEGAL FEES), DAMAGES OR RECOVERIES (INCLUDING ANY AMOUNTS PAID IN SETTLEMENT) ARISING BY REASON OF, CAUSED, OR ALLEGED TO BE CAUSED, BY THE USER'S RELIANCE ON THESE DOCUMENTS.

No	DATE	REVISIONS	BY
-	24-11-2015	ISSUED FOR CONSTRUCTION	TW
-	24-11-2015	ISSUED FOR PERMIT	TW
-	17-11-2015	ISSUED TO CLIENT - FIRST SET	TW
-	17-11-2015	ISSUED TO LANDLORD - FOR APPROVAL	TW
-	17-11-2015	ISSUED TO ENGINEER - FINAL SET	TW
-	02-11-2015	ISSUED TO ENGINEER - FIRST SET	TW

BESTSELLER

225-A DE LIEGE OUEST
MONTREAL, QUEBEC, H2P 1H4

JOB
POLO PARK - OF
1485 PORTAGE AVENUE
WINNIPEG, MANITOBA, R3G 0W4
C.R.U. NO.: 304 & 305

SHEET TITLE
CONSTRUCTION DETAILS - PLANKING

DRAWN BY	CHECKED	DATE	SHEET NO
TW	TI	OCT-2015	A-5.16
JOB No. BSI505		SCALE VARIES	

Filename: I:\Projects\BestSeller\Bestseller_Dept_Store\BS1505_Polo Park\3- CD\A-Current\BS1505-A510.dwg Plotted: 11/25/2015 9:57 AM Plotted by: Mario Muccino

WOOD PLANKING - GENERAL NOTE

- PREVIEW ADEQUATE BLOCKING REQUIRED FOR WOOD PLANKING
- WOOD TO BE (WX) OR (WX) COORDINATE WITH ELEVATIONS A-210 & A-211 AND CEILING PLAN A-130 FOR FINISH
- WOOD PLANKING TO BE NAILED DIRECTLY TO GYPSUM BOARD, ALL NAIL HEADS AND HOLES TO BE PUTTIED AND PAINTED TO MATCH WOOD FINISH
- ALL EXPOSED EDGES OF WOOD PLANKING TO BE FINISHED TO MATCH

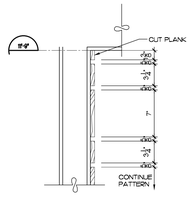

F A-5.17 DETAIL 1/2" = 1'-0"

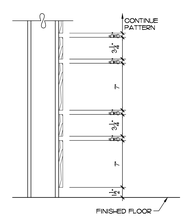

E A-5.17 DETAIL 1/2" = 1'-0"

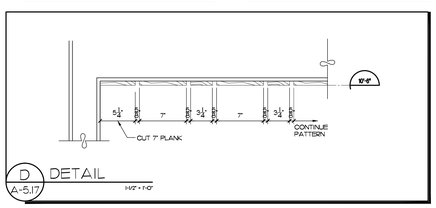

D A-5.17 DETAIL 1/2" = 1'-0"

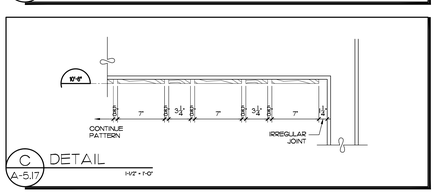

C A-5.17 DETAIL 1/2" = 1'-0"

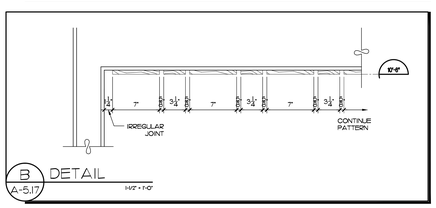

B A-5.17 DETAIL 1/2" = 1'-0"

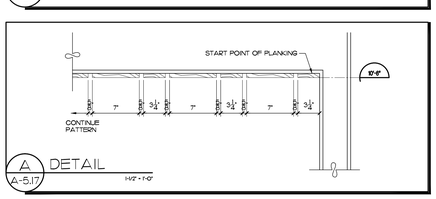

A A-5.17 DETAIL 1/2" = 1'-0"

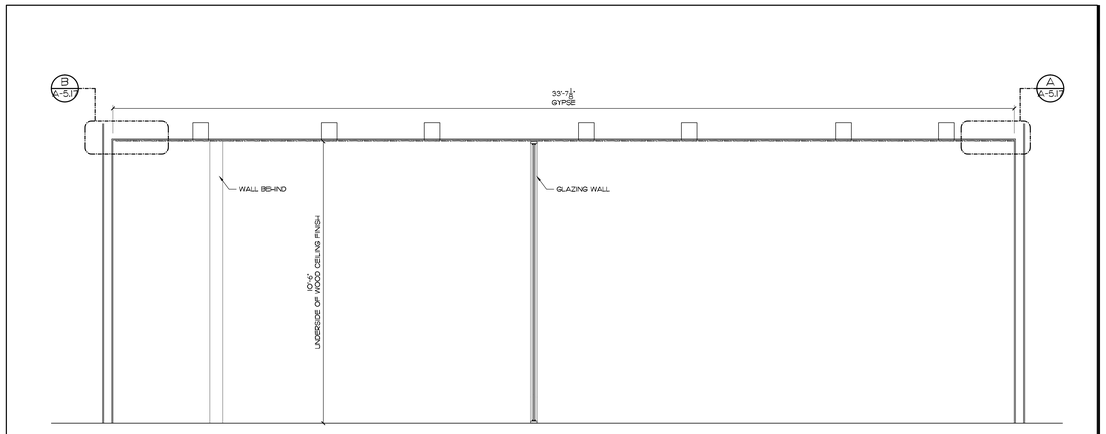

2 A-5.17 SECTION **WOOD PLANKING** 1/2" = 1'-0"

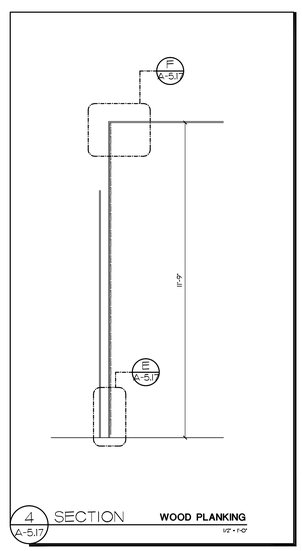

4 A-5.17 SECTION **WOOD PLANKING** 1/2" = 1'-0"

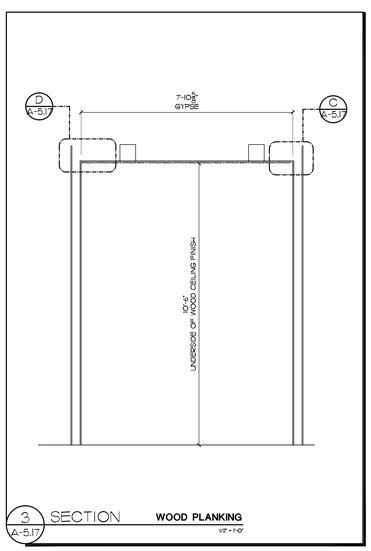

3 A-5.17 SECTION **WOOD PLANKING** 1/2" = 1'-0"

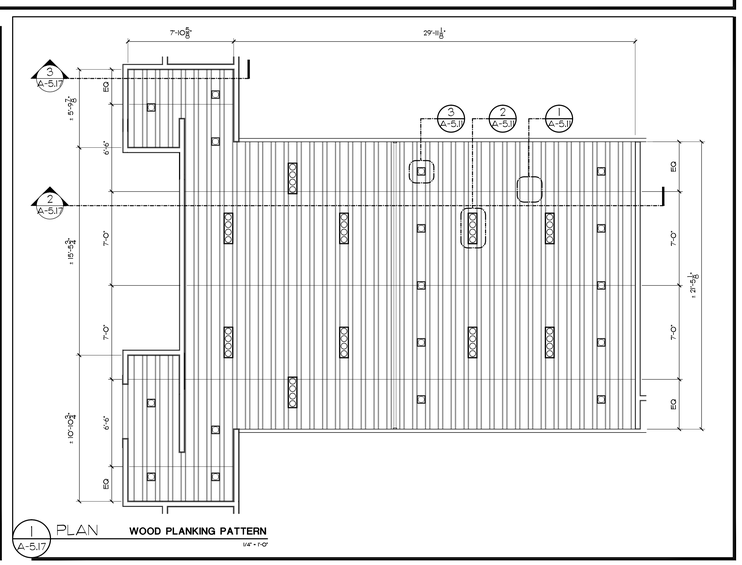

1 A-5.17 PLAN **WOOD PLANKING PATTERN** 1/4" = 1'-0"

COPYRIGHT NOTICE

COPYRIGHT IN THESE DOCUMENTS BELONGS TO LODA INC. AND/OR RENE TRINGALI ARCHITECT. THESE DOCUMENTS MAY NOT BE FORWARDED TO OTHERS, TRANSMITTED, DOWNLOADED OR REPRODUCED IN ANY FORMAT, WHETHER PRINT OR ELECTRONIC WITHOUT THE EXPRESS, WRITTEN PERMISSION OF THE COPYRIGHT OWNER.

DISCLAIMER

USE OF THESE DOCUMENTS IS AT THE USER'S OWN RISK. THE USER SHALL INDEMNIFY AND SAVE HARMLESS LODA INC. AND THEIR SUPPLIERS, AGENTS, EMPLOYEES, OFFICERS AND DIRECTORS FROM ALL CLAIMS, LOSSES, DEMANDS, COSTS AND EXPENSES (INCLUDING LEGAL FEES), DAMAGES OR RECOVERIES (INCLUDING ANY AMOUNTS PAID IN SETTLEMENT) ARISING BY REASON OF, CAUSED, OR ALLEGED TO BE CAUSED, BY THE USER'S RELIANCE ON THESE DOCUMENTS.

LODA DESIGN

L.O.D.A inc.
1200 de Louvain Ouest, Montreal, Quebec, Canada H4N 1G5
(t) 514.382.0571 www.lodadesign.com

No	DATE	REVISIONS	BY
-	24-11-2015	ISSUED FOR CONSTRUCTION	TW
-	24-11-2015	ISSUED FOR PERMIT	TW
-	17-11-2015	ISSUED TO CLIENT - FIRST SET	TW
-	17-11-2015	ISSUED TO LANDLORD - FOR APPROVAL	TW
-	17-11-2015	ISSUED TO ENGINEER - FINAL SET	TW
-	02-11-2015	ISSUED TO ENGINEER - FIRST SET	TW

BESTSELLER

225-A DE LIEGE OUEST
MONTREAL, QUEBEC, H2P 1H4

JOB
POLO PARK - CF
1455 PORTAGE AVENUE
WINNIPEG, MANITOBA, R3G 0W4
C.R.U. NO) 304 & 305

SHEET TITLE
CONSTRUCTION DETAILS - PLANKING

DRAWN BY	CHECKED	DATE	SHEET NO
TW	TI	OCT-2015	A-5.17
JOB No. BS1505		SCALE VARIES	

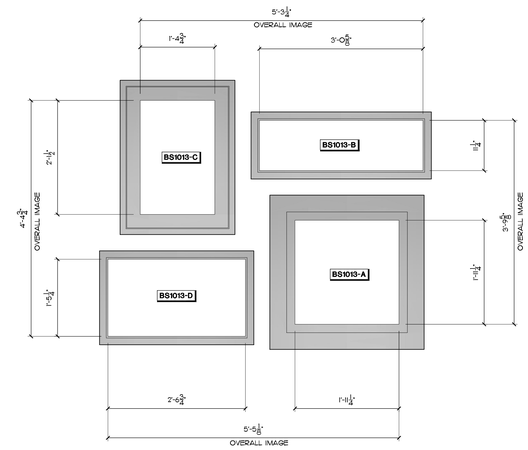

2 A-5.18 ELEVATION - PHOTOFRAMES - INSTALLTION
1"=1'-0"

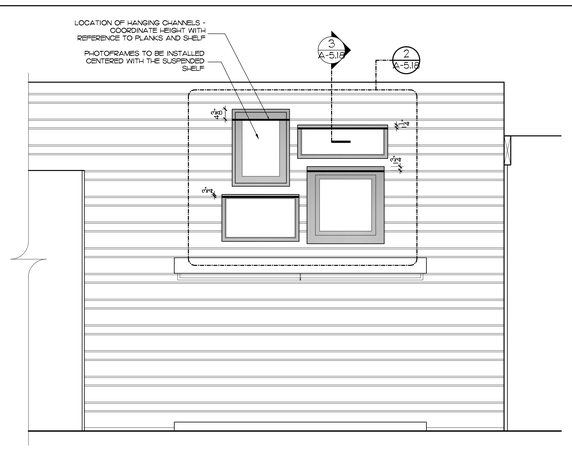

1 A-5.18 ELEVATION - PHOTOFRAMES
1/2"=1'-0"

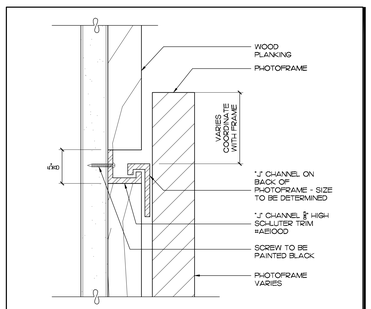

3 A-5.18 DETAIL - PHOTOFRAME INSTALLTION
1"=1'-0"

LODA DESIGN

L.O.D.A inc.
1200 de Louvain Ouest, Montreal, Quebec, Canada H4N 1G5
(t) 514.382.0571 www.lodadesign.com

COPYRIGHT NOTICE

COPYRIGHT IN THESE DOCUMENTS BELONGS TO LODA INC. AND/OR THEIR CONSULTANTS. THESE DOCUMENTS MAY NOT BE DISCLOSED TO OTHERS, TRANSMITTED, DOWNLOADED OR REPRODUCED IN ANY FORMAT; WHETHER PRINT OR ELECTRONIC WITHOUT THE EXPRESS, WRITTEN PERMISSION OF THE COPYRIGHT OWNER.

DISCLAIMER

USE OF THESE DOCUMENTS IS AT THE USER'S OWN RISK. THE USER SHALL INDEMNIFY AND SAVE HARMLESS LODA INC., AND THEIR EMPLOYEES, AGENTS AND CONSULTANTS FROM AND AGAINST ALL CLAIMS, LOSSES, DEMANDS, COSTS AND EXPENSES (INCLUDING LEGAL FEES), DAMAGES OR RECOVERIES (INCLUDING ANY AMOUNTS PAID IN SETTLEMENT) ARISING BY REASON OF, CAUSED, OR ALLEGED TO BE CAUSED, BY THE USER'S RELIANCE ON THESE DOCUMENTS.

No	DATE	REVISIONS	BY
-	24-11-2015	ISSUED FOR CONSTRUCTION	TW
-	24-11-2015	ISSUED FOR PERMIT	TW
-	17-11-2015	ISSUED TO CLIENT - FIRST SET	TW
-	17-11-2015	ISSUED TO LANDLORD - FOR APPROVAL	TW
-	17-11-2015	ISSUED TO ENGINEER - FINAL SET	TW
-	02-11-2015	ISSUED TO ENGINEER - FIRST SET	TW

BESTSELLER

225-A DE LIEGE OUEST
MONTREAL, QUEBEC, H2P 1H4

JOB
POLO PARK - OF
1455 PORTAGE AVENUE
WINNIPEG, MANITOBA, R3G 0W4
C.R.U. NO.: 304 & 305

SHEET TITLE
CONSTRUCTION DETAILS - PHOTOFRAMES

DRAWN BY	CHECKED	DATE	SHEET NO
TW	TI	OCT-2015	A-5.18
JOB No. BS1505		SCALE VARIES	

Filename: I:\Projects\BestSeller\Bestseller_Dept_Store\BS1505_Polo Park\3- CD\A-Current\BS1505-AS10.dwg Plotted: 11/25/2015 9:58 AM Plotted by: Mario Muccino

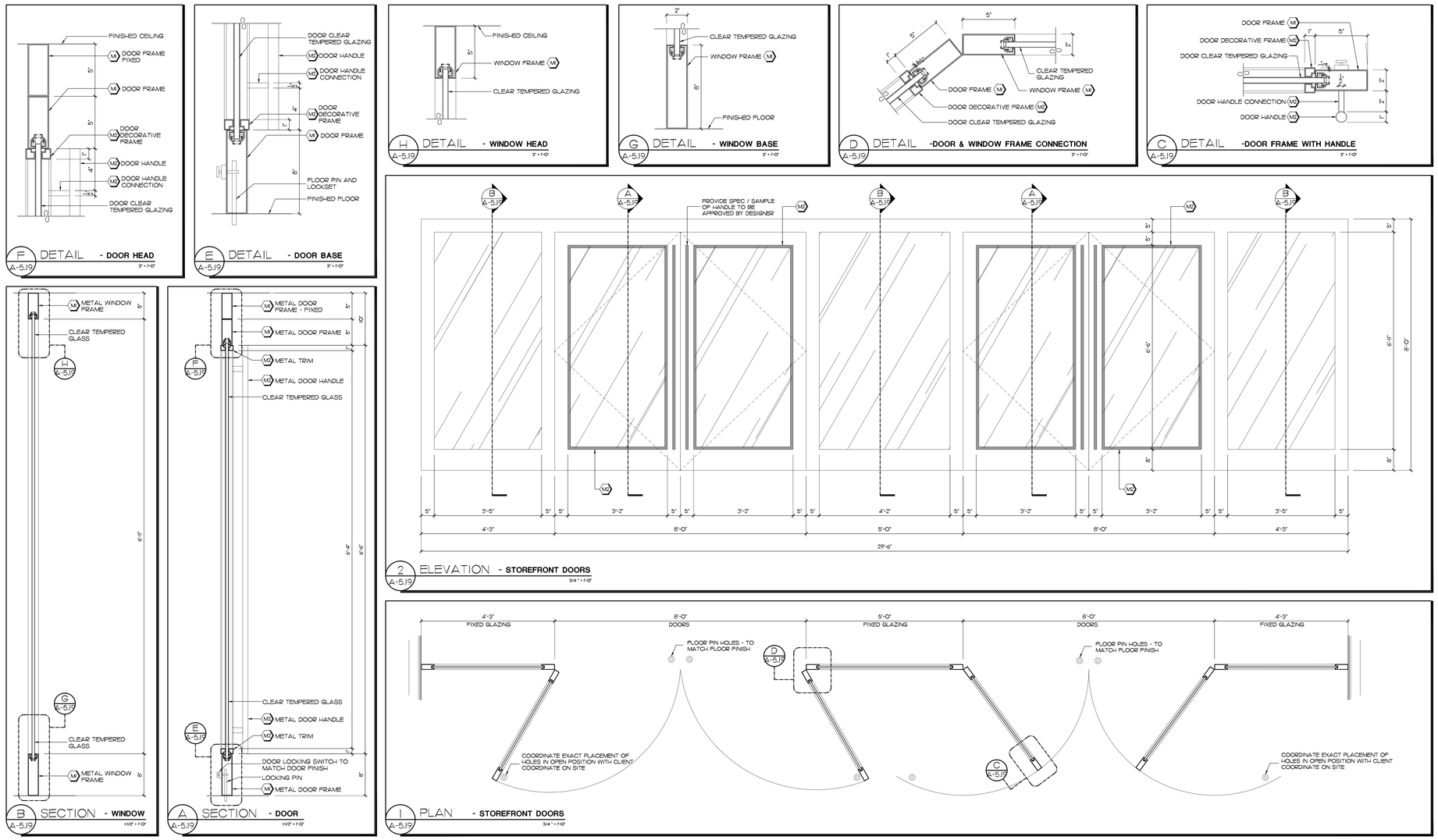

LODA
DESIGN

L.O.D.A inc.
1200 de Louvain Ouest, Montreal, Quebec, Canada H4N 1G5
(t) 514.382.0571 www.lodadesign.com

COPYRIGHT NOTICE

COPYRIGHT IN THESE DOCUMENTS BELONGS TO LODA INC. AND/OR RENE TRINGALI ARCHITECT. THESE DOCUMENTS MAY NOT BE FORWARDED TO OTHERS, TRANSMITTED, DOWNLOADED OR REPRODUCED IN ANY FORMAT, WHETHER PRINT OR ELECTRONIC WITHOUT THE EXPRESS, WRITTEN PERMISSION OF THE COPYRIGHT OWNER.

DISCLAIMER

USE OF THESE DOCUMENTS IS AT THE USER'S OWN RISK. THE USER SHALL INDEMNIFY AND SAVE HARMLESS LODA INC., AND THEIR EMPLOYEES, AGENTS AND CONSULTANTS FROM AND AGAINST ALL CLAIMS, LOSSES, DEMANDS, COSTS AND EXPENSES (INCLUDING LEGAL FEES), DAMAGES AND SUBSEQUENT DAMAGES (COLLECTIVELY, "THE SETTLEMENT") ARISING BY REASON OF, CAUSED, OR ALLEGED TO BE CAUSED, BY THE USER'S RELIANCE ON THESE DOCUMENTS.

No	DATE	REVISIONS	BY
-	24-11-2015	ISSUED FOR CONSTRUCTION	TW
-	24-11-2015	ISSUED FOR PERMIT	TW
-	17-11-2015	ISSUED TO CLIENT - FIRST SET	TW
-	17-11-2015	ISSUED TO LANDLORD - FOR APPROVAL	TW
-	17-11-2015	ISSUED TO ENGINEER - FINAL SET	TW
-	02-11-2015	ISSUED TO ENGINEER - FIRST SET	TW

BESTSELLER

225-A DE LIEGE OUEST
MONTREAL, QUEBEC, H2P 1H4

JOB
POLO PARK - OF
1485 PORTAGE AVENUE
WINNIPEG, MANITOBA, R3G 0W4
C.R.U. NO.: 304 & 305

SHEET TITLE
CONSTRUCTION DETAILS - DOORS

DRAWN BY	CHECKED	DATE	SHEET NO
TW	TI	OCT-2015	A-5.19
JOB No. BS1505		SCALE VARIES	

Filename: I:\Projects\BestSeller\Bestseller_Dept_Store\BS1505_Polo Park\3- CD\A-Current\BS1505-A510.dwg Plotted: 11/25/2015 9:58 AM Plotted by: Mario Muccino

LIGHTING LEGEND

No	SYMBOL	LOCATION	MANUFACTURIER	DESCRIPTION	NOTE	QTE.
1		RECESSED LIGHT FIXTURE - ENTRANCE & CASH AREA	STANPRO	COLOR : BLACK ORBIT - LED, ADJUSTABLE LIGHT FIXTURE RLR-1-L-S2-80-A-B-B-B-30K-M	COORDINATE HEIGHTS WITH REELECTED CEILING PLAN	34
2		RECESSED LIGHT FIXTURE - ENTRANCE & CASH AREA	STANPRO	COLOR : BLACK ORBIT - LED, ADJUSTABLE LIGHT FIXTURE RLR-1-L-S2-80-A-B-B-B-30K-M	COORDINATE HEIGHTS WITH REELECTED CEILING PLAN	25
3		RECESSED LIGHT FIXTURE	STANPRO	COLOR : BLACK UNISIO - 14W LED 5" RECESSED REG3OO20-14-WW-21 & REG35052-28"	COORDINATE HEIGHTS WITH REELECTED CEILING PLAN	7
4		RECESSED FITTING ROOM LIGHT FIXTURE	STANPRO	COLOR : BLACK UNISIO - 14W LED 5" RECESSED REG3OO20-14-WW-21 & REG35053-52"	COORDINATE HEIGHTS WITH REELECTED CEILING PLAN	26
5		STOREFRONT RECESSED LIGHT FIXTURE	STANPRO	COLOR : BLACK DOMINO - 14W LED REG4960-L-1-OO14-A-BK-35051	COORDINATE HEIGHTS WITH REELECTED CEILING PLAN	14
6		CEILING MOUNTED FITTING ROOM FIXTURE	PHILIPS	COLOR : BLACK EW DOWNLIGHT POWERCORE GEN2 3000 K - LUMINAIRE LED AU PLAFOND	COORDINATE HEIGHTS WITH REELECTED CEILING PLAN	-
7	OR	TRACK LIGHTS	STANPRO	COLOR : BLACK TL9004 -30-3-M-A-J-BK TRACK LIGHT	COORDINATE HEIGHTS WITH REELECTED CEILING PLAN	286
8	96"	STOCKROOM LIGHTING	COOPER LIGHTING METALUX	SUSPENDED FLUORESCENT TUBING , PROVIDE METAL CAGE. 2 LAMP - 8'-0"	COORDINATE HEIGHTS WITH REELECTED CEILING PLAN	-
9	48"	STOCKROOM LIGHTING	COOPER LIGHTING METALUX	SUSPENDED FLUORESCENT TUBING , PROVIDE METAL CAGE. 2 LAMP - 4'-0"	COORDINATE HEIGHTS WITH REELECTED CEILING PLAN	-
10	48"	WASHROOM LIGHTING	COOPER LIGHTING METALUX	CEILING MOUNTED FLUORESCENT TUBING , PROVIDE FROSTED LENS. 2 LAMP - 4'-0"	COORDINATE HEIGHTS WITH REELECTED CEILING PLAN	2
11	36"	STOCKROOM LIGHTING	COOPER LIGHTING METALUX	SUSPENED FLUORESCENT TUBING , PROVIDE METAL CAGE. 2 LAMP - 3'-0"	COORDINATE HEIGHTS WITH REELECTED CEILING PLAN	-
12	24"	STOCKROOM LIGHTING	COOPER LIGHTING METALUX	SUSPENED FLUORESCENT TUBING , PROVIDE METAL CAGE. 2 LAMP - 2'-0"	COORDINATE HEIGHTS WITH REELECTED CEILING PLAN	-
13		STOREFRONT WALL SCONCE	UNION (SUR MESURE)	ESTIMATION : 50W EACH	COORDINATE HEIGHT WITH DETAILS	4
14		SUSPENDED CHANDELIER WITHIN FITTING ROOMS	UNION (SUR MESURE)	ESTIMATION : 150W	COORDINATE HEIGHT WITH DETAILS ON A DIMMER	1
15		SUSPENDED CHANDELIER WITHIN ENTRANCE	UNION (SUR MESURE)	ESTIMATION : 6 X 24W	COORDINATE HEIGHT WITH DETAILS ON A DIMMER	2
16	A	FIXTURE LEDS	DISTRIBUTION DIRECT LED INC.	STRIP LED LIGHTING - ALP DOOR	COORDINATE PLACEMENT AND INSTALLATION WITH CLIENT AND DESIGNER	N/A
17	B	SHOE FIXTURE LEDS	UNION		COORDINATE PLACEMENT AND INSTALLATION WITH CLIENT AND DESIGNER	N/A
18	C	ALCOVE LEDS	DISTRIBUTION DIRECT LED INC.	STRIP LED LIGHTING - DL-FLEX-9.6-WW - DL-ALU-D2	COORDINATE PLACEMENT ON A DIMMER	N/A
19	D	STOREFRONT WALL WASHER LED	TPK	LED WALL WASHER - LWWLPL-5 SERIES 45° 120V	COORDINATE PLACEMENT ON A DIMMER	N/A
20			STANPRO LUMACELL	WALL MOUNTED 2 HEAD EMERGENCY LIGHT WITH BATTERY SLC-12-4O-HP-2M-4L2-BK	COORDINATE WITH THE MECH & ELECT ENGINEERS DRAWINGS.	-
21			STANPRO LUMACELL	SUSPENDED 2 HEAD EMERGENCY LIGHT SLC-12-4O-HP-2M-4L2-BK	COORDINATE WITH THE MECH & ELECT ENGINEERS DRAWINGS.	-
22			STANPRO LUMACELL	SR - RECESSED REMOTE EMERGENCY SR-H-120V-BK PAR 36	COORDINATE WITH THE MECH & ELECT ENGINEERS DRAWINGS.	-
23	E E E	EXIT SIGNS	STANPRO LUMACELL	SUSPENDED: SLSRE-C-1-RC-BK-MR (RETAIL AREA) WALL MOUNTED SLSRS-C-1-BK-IBI (STOCKROOM)	COORDINATE WITH THE MECH & ELECT ENGINEERS DRAWINGS.	-
24		EXISTING LIGHT FIXTURE - RELOCATED		EXISTING FIXTURE - RELOCATED		16
						-

ELECTRICAL LEGEND

No	SYMBOL	LOCATION	MANUFACTURIER	DESCRIPTION	NOTE	QTE.
	J	JUNCTION BOX FOR FIXTURES		JUNCTION BOX	COORDINATE WITH THE MECH & ELECT ENGINEERS DRAWINGS.	21
				SPRINKLER HEAD TO MATCH ADJACENT CEILING	COORDINATE WITH THE MECH & ELECT ENGINEERS DRAWINGS.	-
				ELECTRICAL OUTLET @ 6" A.F.F. HORIZONTALLY UNLESS OTHERWISE NOTED TO MATCH ADJACENT WALL FINISH	COORDINATE WITH THE MECH & ELECT ENGINEERS DRAWINGS.	48
				SIGNAGE JUNCTION BOX	COORDINATE WITH THE MECH & ELECT ENGINEERS DRAWINGS.	-
				4 WAY ELECTRICAL OUTLET @ 6" A.F.F. HORIZONTALLY INSTALLED. UNLESS OTHERWISE NOTED TO MATCH ADJACENT WALL FINISH	COORDINATE WITH THE MECH & ELECT ENGINEERS DRAWINGS.	-
	S			ELECTRICAL OUTLET FOR STEAMER @ 6" A.F.F. HORIZONTALLY MOUNTED UNLESS OTHERWISE NOTED TO MATCH ADJACENT WALL FINISH	COORDINATE WITH THE MECH & ELECT ENGINEERS DRAWINGS.	6
		RETAIL AREA		RECESSED FLOOR OUTLET WITH COVER PLATE 2X CONVENIENCE DUPLEX OUTLETS FINISH TO MATCH FLOOR	COORDINATE WITH THE MECH & ELECT ENGINEERS DRAWINGS.	13
		CASH AND STOCKROOM		TELEPHONE OUTLET	COORDINATE WITH THE MECH & ELECT ENGINEERS DRAWINGS.	3
		CASH AND STOCKROOM		CAT 6 DATA OUTLET	COORDINATE WITH THE MECH & ELECT ENGINEERS DRAWINGS.	11
		STOCKROOM & RETAIL AREA		BUZZER - STOCKROOM DOOR BELL - RETAIL AREA		-
	T	STOCKROOM		THERMOSTAT TO MATCH ADJACENT WALL FINISH	COORDINATE WITH THE MECH & ELECT ENGINEERS DRAWINGS.	2
		STOCKROOM		ELECTRICAL PANEL	COORDINATE WITH THE MECH & ELECT ENGINEERS DRAWINGS.	1
	K		VISION ALARM	KEYPAD FOR ALARM SYSTEM. ENGINEER TO PROVIDE CAT 5 CONNECTION -BLACK	CONTACT: GAD MERGUI (GAD+VISIONALARM.CA) TEL: 514-448-2930	2
	A		VISION ALARM	DOOR CONTACT - ENGINEER TO PROVIDE CAT 5 UNDERNEATH THE DOOR FRAME -BLACK	CONTACT: GAD MERGUI (GAD+VISIONALARM.CA) TEL: 514-448-2930	3
	B		VISION ALARM	MOTION DETECTOR- ENGINEER TO PROVIDE CAT 5 CONNECTION WITHIN THE CEILING -BLACK	CONTACT: GAD MERGUI (GAD+VISIONALARM.CA) TEL: 514-448-2930	6
		STOCKROOM	VISION ALARM	CONTROL BOX FOR ALARM SYSTEM. FINAL PLACEMENT TO BE COORDINATED WITH ALARM VENDOR	CONTACT: GAD MERGUI (GAD+VISIONALARM.CA) TEL: 514-448-2930	1
	VAC	STOCKROOM	DRAINVAC	CENTRAL VAC SYSTEM - FIXED TO THE WALL S2000 SYSTEM 2 2AC9922-CT	COORDINATE WITH THE MECH & ELECT ENGINEERS DRAWINGS.	2
	VC	RETAIL AREA	DRAINVAC	CENTRAL VAC OUTLET TO MATCH ADJACENT WALL FINISH	COORDINATE WITH THE MECH & ELECT ENGINEERS DRAWINGS.	4
	AV Rack Type 1(R)	STOCKROOM		BACK OFFICE/RACK TYPE 1(L) PRE-INSTALLE: • POWER CONNECTOR 2X 6 OUTLET • PATCH PANEL 24 OUTLET • AMPLIFIER • MIB •LAB		1
	TC	STORE ENTRANCE		TRAFFIC COUNTER -TO MATCH ADJACENT WALL FINISH	ENGINEER TO COORDINATE ALL CONNECTIONS WITH VENDOR	2
	SS	STOCKROOM	STINGRAY	STEREO SYSTEM	COORDINATE WITH VENDOR DRAWINGS	1
		RETAIL AREA	STINGRAY	SUBWOOFER -BLACK	COORDINATE WITH VENDOR DRAWINGS	8
		RETAIL AREA	STINGRAY	SOUND SYSTEM SPEAKERS -BLACK	COORDINATE WITH VENDOR DRAWINGS	18
		RETAIL AREA	STINGRAY	LOUDSPEAKER -BLACK	COORDINATE WITH VENDOR DRAWINGS	7
	SB	RETAIL AREA	VISION ALARM	SENSORMATIC COMMUNICATIONS BOXES	CONTACT: GAD MERGUI (GAD+VISIONALARM.CA) TEL: 514-448-2930	2

LODA
DESIGN
L.O.D.A inc.
1200 de Louvain Ouest, Montreal, Quebec, Canada H4N 1G5
(t) 514.382.0571 www.lodadesign.com

COPYRIGHT NOTICE

COPYRIGHT IN THESE DOCUMENTS BELONGS TO LODA INC. AND/OR RENE TRINGALI ARCHITECT. THESE DOCUMENTS MAY NOT BE FORWARDED TO OTHERS, TRANSMITTED, DOWNLOADED OR REPRODUCED IN ANY FORMAT, WHETHER PRINT OR ELECTRONIC WITHOUT THE EXPRESS, WRITTEN PERMISSION OF THE COPYRIGHT OWNER.

DISCLAIMER

USE OF THESE DOCUMENTS IS AT THE USER'S OWN RISK. THE USER SHALL INDEMNIFY AND SAVE HARMLESS LODA INC., AND THEIR EMPLOYEES, AGENTS AND CONSULTANTS FROM AND AGAINST ALL CLAIMS, LOSSES, DEMANDS, COSTS AND EXPENSES (INCLUDING LEGAL FEES), DAMAGES OR RECOVERIES (INCLUDING ANY AMOUNTS PAID IN SETTLEMENT) ARISING BY REASON OF, CAUSED, OR ALLEGED TO BE CAUSED, BY THE USER'S RELIANCE ON THESE DOCUMENTS.

No	DATE	REVISIONS	BY
-	24-11-2015	ISSUED FOR CONSTRUCTION	TW
-	24-11-2015	ISSUED FOR PERMIT	TW
-	17-11-2015	ISSUED TO CLIENT - FIRST SET	TW
-	17-11-2015	ISSUED TO LANDLORD - FOR APPROVAL	TW
-	17-11-2015	ISSUED TO ENGINEER - FINAL SET	TW
-	02-11-2015	ISSUED TO ENGINEER - FIRST SET	TW

BESTSELLER

225-A DE LIEGE OUEST
MONTREAL, QUEBEC, H2P 1H4

JOB
POLO PARK - CF
1485 PORTAGE AVENUE
WINNIPEG, MANITOBA, R3G 0W4
C.R.U. NO: 304 & 305

SHEET TITLE
LEGENDS & SCHEDULES

DRAWN BY	CHECKED	DATE	SHEET NO
TW	TI	OCT-2015	A-6.00
JOB No. BS1505		SCALE N/A	

WALL LEGEND

- EXISTING WALLS
- REPAIR AS REQUIRED

(X)

- EXISTING DEMISING WALL FIRE RATED BETWEEN STORE AND CORRIDOR
- REPAIR AS REQUIRED

(XF)

16"

- GYPSUM BOARD ½" (ONE SIDE)
- METAL STUDS 3⅝" OR 5¼" @ 16" C/C (20 GA) TO UNDERNEATH OF STEEL DECK

(1)

16"

- GYPSUM BOARD ½" (ONE SIDE)
- METAL STUDS 3⅝" OR 5¼" @ 16" C/C (20 GA) TO FINISHED CEILING

(2)

16"

- TILE FINISH
- CEMENT BOARD ½" (ONE SIDE)
- METAL STUDS 3⅝" OR 5¼" @ 16" C/C (20 GA) TO FINISHED CEILING

(3)

16"

- HUMIDITY RESISTANT GYPSUM BOARD ½" (ONE SIDE)
- METAL STUDS 3⅝" @ 16" C/C (20 GA) TO FINISHED CEILING

(4)

16"

- FIRE RESISTANCE 1 HOUR (LLC DESIGN W415)
- GYPSUM BOARD TYPE "X" ⅝" (TWO SIDES)
- METAL STUDS 3⅝" @ 16" C/C (20 GA) TO UNDERSIDE OF STEEL DECK

(5)

16"

- WALL BUILT TO MATCH FIRE RESISTANCE OF TYPE X OR XF
- ENSURE FIRE RESISTANCE IS UP TO CODE

(6)

HARDWARE

GROUP #1 (EXIT DOOR)
#1 EXISTING REAR EXIT TO SERVICE CORRIDOR - MINIMAL REQUIREMENTS:
"DETEX" ECL-500, EXIT CONTROL LOCK.
NOTE: CHANGE-OUT LOCKING MECHANISM WITH "MEDECO" LOCK CORE.
- DOOR OPERATION SHALL BE EXCLUSIVELY THROUGH "DETEX" UNIT.)
- DOOR CLOSER "CANARGPAY", SERIES 50, #53, ALUMINUM FINISH, MOUNTED STORE SIDE (IF NOT EXISTING)
- KICKPLATE, "TYKES" SERIES 8400, 10" (254) H. X FULL WIDTH OF DOOR, BRUSHED ALUMINUM, MOUNTED 1" FROM DOOR'S BOTTOM, BOTH SIDES
- T-RESHOLD MEDIUM / HEAVY DUTY ALUMINUM T-RESHOLD, FULL WIDTH OF DOOR OPENING (IF NOT EXISTING)
- TENANT IDENTIFICATION SIGNAGE, AS PER LANDLORD REQUIREMENTS (EXTERIOR SIDE)
- PEEP / DOOR VIEWER - ROCKWOOD MODEL 622 (5/8"(16)), 180 WIDE-ANGLE DOOR VIEWER (OR EQUAL), CHROME FINISH
- DOOR BUZZER - "EDWARDS" #17886-B BUTTON, #590 SERIES TRANSFORMER #462 BUZZER W/ LOUVERED COVERPLATE & TRANSFORMER MOUNTING PLATE
- DOOR SHALL NOT BE OPERABLE FROM EXTERIOR. DOOR OPERATION SHALL OCCUR EXCLUSIVELY THROUGH DETEX UNIT AT INTERIOR / STORE SIDE OF DOOR

G.C TO VERIFY EXISTING DOOR AND REPORT BACK TO ARCHITECT IF DOOR IS FIRE RATED MIN. 1-1/2 HOUR. DOOR IS TO CARE LABEL WITH LLC APPROVAL. IF FIRE RATING OF DOOR CAN NOT BE DETERMINED G.C IS TO REPLACE EXISTING DOOR WITH NEW FIRE RATED DOOR TO MEET CODE REQUIREMENT.

GROUP #2A (WASHROOM)

-DOOR HANDLE "AL" BY SCHLAGE, MODEL OMEGA FUNCTION AL40S-F76 FINISH #619 "SATIN NICKEL" (OR EQUIVALENT)
-1½" PAIR OF STAINLESS STEEL HINGES.
-1 STAINLESS STEEL DOOR KICKPLATE
- PROVIDE WALL MOUNTED DOOR STOPPER

GROUP #2B (HC WASHROOM)

-DOOR HANDLE "AL" BY SCHLAGE, MODEL OMEGA FUNCTION AL40S-F76 FINISH #619 "SATIN NICKEL" (OR EQUIVALENT)
- 6" STAINLESS STEEL DOOR PULL INSTALLED ON INSIDE FACE OF DOOR
-1½" PAIR OF STAINLESS STEEL SPRING LOADED HINGES.
-1 STAINLESS STEEL DOOR KICKPLATE
- BARRIER FREE UNISEX DOOR SIGN ON EXTERIOR
- PROVIDE OVER HEAD DOOR STOPPER

GROUP #4 (ENTRANCE)

- 2 PAIRS OF HINGES TO MATCH DOOR FINISH AND COLOR
- DORMA BTS80 FLOOR CONCEALED DOOR CLOSER W/ HOLD OPEN V FUNCTION AT 120°
-THUMBTURN ON INSIDE AND KEYED LOCK ON OUTSIDE AT 36" A.F.F.
- 96" PULL HANDLE SPECS. TO FOLLOW

NOTE:
- COORDINATE ALL KEYING REQUIREMENTS WITH CLIENT.
ALL HARDWARE SPECIFICATIONS MUST BE CONFIRMED WITH CLIENT AND DESIGNER BEFORE INSTALLATION

DOOR & FRAME SCHEDULE

DOOR NUMBER		PLACEMENT FROM	PLACEMENT TO	DOORS TYPE	DOORS DIMENSIONS	DOORS MATERIAL	DOORS FINISH	FRAMES DIMENSIONS	FRAMES MATER.	FRAMES FINISH	HARDWARE NUMBER. #	NOTES
001	EXISTING EXIT DOOR	STOCK-ROOM	CORRIDOR	EXISTING	VERIFY ON SITE	EXISTING	PA	EXISTING	EXIST.	PA	GROUP #1	G.C. TO ENSURE THE FUNCTIONALITY OF THE DOOR HARDWARE AND TO REPLACE AND REPAIR AS NECESSARY. DOOR TO BE FIRE RATED 1-1/2 HOUR MIN. REPLACE AS REQUIRED
-	EXISTING EXIT DOOR	STOCK-ROOM	CORRIDOR	NEW	-	-	-	SEE DETAIL	-	-	GROUP #1	
-	EXISTING WASH-ROOM DOOR	STOCK-ROOM	WASH-ROOM	EXISTING	VERIFY ON SITE	EXISTING	-	EXISTING	EXIST.	-	GROUP #2	G.C. TO ENSURE THE FUNCTIONALITY OF THE DOOR HARDWARE AND TO REPLACE AND REPAIR AS NECESSARY
002A	WASH-ROOM DOOR	STOCK-ROOM	WASH-ROOM	NEW	30" X 80" X 1⅜"	WOOD	PA	SEE DETAIL	WOOD	PA	GROUP #2A	
002B	HC WASH-ROOM DOOR	STOCK-ROOM	WASH-ROOM	NEW	36" X 80" X 1⅜"	WOOD	PA	SEE DETAIL	WOOD	PA	GROUP #2B	
003	NEW ENTRANCE DOOR	MALL	RETAIL AREA	NEW	48" X 120" X 2"	METAL AND GLASS	M	SEE DETAIL	METAL	M	GROUP #4	SEE DETAIL

FINISH LEGEND

CAT.	SYMB.	DESCRIPTION
METAL	M1	METALDARK GRAY "PROTECH" HS612A971
	M2	ENGLISH BRONZE "PLACAGE JG"
	M3	NOT APPLICABLE
	M4	NOT APPLICABLE
LAMINATE	L1	MATTE BLACK LAMINATE TO MATCH P5
	L2	GRAY COLORCORE TO MATCH P3
	L3	NOT APPLICABLE
	L4	NOT APPLICABLE
WOOD	W1	7" X ¾" SMOKED OAK - CLEAN NATURAL OIL FINISH BY : UNION SQUARE VINTAGE WOOD CONTACT : GARY LITWIN 514-726-1493 SAMPLE TO BE CONFIRMED BY DESIGNER
	W2	BLACK MATTE ASH / OR OAK SAMPLE TO BE CONFIRMED BY DESIGNER
	W3	MDF FINISH MEDIUM GREY MATTE TO MATCH PANTONE 423M SAMPLE TO BE CONFIRMED BY DESIGNER
	W4	MDF DARK GREY MATTER FINISH TO MATCH PANTONE 425M SAMPLE TO BE CONFIRMED BY DESIGNER
	W5	MDF LIGHT GREY MATTE FINISH TO MATCH PANTONE 421M SAMPLE TO BE CONFIRMED BY DESIGNER
	W6	MDF BLACK MATTE FINISH TO MATCH COLOR P5 SAMPLE TO BE CONFIRMED BY DESIGNER
	W7	NOT APPLICABLE
FILM	FL1	FILM APPLIED TO GLASS SPECS TO BE CONFIRMED BY BESTSELLER
	FL2	NOT APPLICABLE

CAT.	SYMB.	DESCRIPTION
TILE	V1	12"X12" VINYL TILE / 4" VINYL BASEBOARD GREY VINYL - SPEC TBD. G.C. TO PROVIDE SAMPLE TO DESIGNER
	T1	PORCELIANE TILE STYLE # : CREATIVE CONCRETE CODE : 49N NERO 18" X 36" COLOR : DARK GREY FOR : STOREFRONT BY : CIOT CONTACT : GHISLAINE GOLDING TEL : 514-382-5180 #1235 GROUT : MAPEI #10 BLACK
	T2	PORCELIANE TILE STYLE # : CREATIVE CONCRETE CODE : 60CN GRIGIO SCURO 24" X 24" COLOR : MEDIUM GREY FOR : SALES AREA BY : CIOT CONTACT : GHISLAINE GOLDING TEL : 514-382-5180 #1235 GROUT : MAPEI #19 PEARL GREY
	T3	PORCELIANE TILE STYLE # : CREATIVE CONCRETE CODE : 49N NERO 18" X 18" COLOR : DARK GREY FOR : STOREFRONT BY : CIOT CONTACT : GHISLAINE GOLDING TEL : 514-382-5180 #1235 GROUT : MAPEI #10 BLACK
	C1	SELF LEVELING POURED & POLISHED CONCRETE PROVIDE SAMPLE FOR CONFIRMATION BY DESIGNER
	F1	7" WOOD FLOORING TO MATCH W1 SAMPLE TO BE CONFIRMED BY DESIGNER
	F2	NOT APPLICABLE
STONE	S1	NERO ASSOLUTO GRANITE COUNTERTOP PREMIUM HONED FINISH - 2CM BY CIOT
	S2	SILEX CONCRETE WALL PANELS BY: CIOT 48" X 96" PEAU DE BETON "BESTSEILLER" NATUREL SCELLANT MATTE FINISH
	S3	NOT APPLICABLE
OTHER	X1	PLEXIGLAS GRIS TRANSPARENT 3/8" D'EPAISSEUR PLME GRIS PALE #2064 ATELIER PLASTICA (418) 651-1312
	X2	MIROIR OPAQUE LOW RION 1 FACE 6MM BY : WALKER TEXTURES
	X3	1/4" MIRROR TEMPERED GLASS
	X4	GREY MIRROR SATIN 1 FACE 6MM BY : WALKER TEXTURES
	X5	GREY TEMPERED GLASS - TO MATCH APPROVED SAMPLE THICKNESS VARY
	E1	CLEAR SEALED EPOXY FINISH

CAT.	SYMB.	DESCRIPTION
PAINT	P1	PAINT "BENJAMIN MOORE" 2134-60 COLOR: LIGHT GREY (TO MATCH PANTONE 421M) FINISH (CEILING) : MATTE FINISH (WALLS) : EGGSHELL FINISH (BASEBOARD) : SATIN FINISH (MOLDING) : GLOSSY
	P2	PAINT "BENJAMIN MOORE" 2124-30 COLOR: MEDIUM GREY (TO MATCH PANTONE 423M) FINISH (CEILING) : MATTE FINISH (WALLS) : EGGSHELL FINISH (BASEBOARD) : SATIN FINISH (MOLDING) : GLOSSY
	P3	PAINT "BENJAMIN MOORE" CSP-60 COLOR: DARK GREY (TO MATCH PANTONE 425M) FINISH (CEILING) : MATTE FINISH (WALLS) : EGGSHELL FINISH (BASEBOARD) : SATIN FINISH (MOLDING) : GLOSSY
	P4	PAINT "BENJAMIN MOORE" 2125-70 COLOR: WHITE FINISH (CEILING) : MATTE FINISH (WALLS) : EGGSHELL FINISH (BASEBOARD) : SATIN FINISH (MOLDING) : GLOSSY
	P5	PAINT "BENJAMIN MOORE" 2132-20 COLOR: BLACK FINISH (CEILING) : MATTE FINISH (WALLS) : EGGSHELL FINISH (BASEBOARD) : SATIN FINISH (MOLDING) : GLOSSY
	P6	NOT APPLICABLE
FABRIC	F1	LIGHT GREY FABRIC BY : AVANT GARDE DESTINY 060 - VIBES COLLECTION WWW.MASTERFABRICS.COM
	F2	DARK GREY FABRIC BY : AVANT GARDE DAKOTA 040 - DAKOTA COLLECTION WWW.MASTERFABRICS.COM
	F3	GREY FABRIC FOR FITTING ROOM CURTAINS BY : AVANT GARDE - CHESS 060 WWW.MASTERFABRICS.COM
	F4	NOT APPLICABLE
	F5	NOT APPLICABLE

NOTE: ALL FINISHES ON INTERIOR WALLS AND CEILING TO HAVE 150 FLAME SPREAD RATING

LODA DESIGN
L.O.D.A inc.
1200 de Louvain Ouest, Montreal, Quebec, Canada H4N 1G5
(t) 514.382.0571 www.lodadesign.com

COPYRIGHT NOTICE
COPYRIGHT IN THESE DOCUMENTS BELONGS TO LODA INC. AND/OR RENE TRINGALI ARCHITECT. THESE DOCUMENTS MAY NOT BE FORWARDED TO OTHERS, TRANSMITTED, DOWNLOADED OR REPRODUCED IN ANY FORMAT, WHETHER PRINT OR ELECTRONIC WITHOUT THE EXPRESS, WRITTEN PERMISSION OF THE COPYRIGHT OWNER.

DISCLAIMER
USE OF THESE DOCUMENTS IS AT THE USER'S OWN RISK. THE USER SHALL INDEMNIFY AND SAVE HARMLESS LODA INC. AND THEIR EMPLOYEES, AGENTS AND CONSULTANTS FROM AND AGAINST ALL CLAIMS, LIABILITIES, DEMANDS, COSTS AND EXPENSES (INCLUDING LEGAL FEES), DAMAGES OR RECOVERIES (INCLUDING ANY AMOUNTS PAID IN SETTLEMENT) ARISING BY REASON OF, CAUSED, OR ALLEGED TO BE CAUSED, BY THE USER'S RELIANCE ON THESE DOCUMENTS.

No	DATE	REVISIONS	BY
-	24-11-2015	ISSUED FOR CONSTRUCTION	TW
-	24-11-2015	ISSUED FOR PERMIT	TW
-	17-11-2015	ISSUED TO CLIENT - FIRST SET	TW
-	17-11-2015	ISSUED TO LANDLORD - FOR APPROVAL	TW
-	17-11-2015	ISSUED TO ENGINEER - FINAL SET	TW
-	02-11-2015	ISSUED TO ENGINEER - FIRST SET	TW

BESTSELLER

225-A DE LIEGE OUEST
MONTREAL, QUEBEC, H2P 1H4

JOB
POLO PARK - CF
1455 PORTAGE AVENUE
WINNIPEG, MANITOBA, R3G 0W4
C.R.U. NO: 304 & 305

SHEET TITLE
LEGENDS & SCHEDULES

DRAWN BY	CHECKED	DATE	SHEET NO
TW	TI	OCT-2015	A-6.01
JOB No. BS1505		SCALE N/A	

LEGEND - FLOOR & WALL FIXTURES

SYMBOL	LOCATION	IDENTIFICATION	REQUIRES POWER	FIXED	MOVABLE	NOTE	QTE.
	- EASEL	BS1O5			●		2
NOT TO SCALE	- CASH COUNTER	BS2O1	●	●			1
NOT TO SCALE	- CASH BACKBAR	BS2O1 - B		●			1
- PANNEAU D'ACCESSOIRES DU COMPTOIR-CAISSE	- METAL ACCESSORY PANELS	BS2O2		●			6
	- CONCIERGE DESK	BS2O3	●	●			2
	- STOREFRONT DISPLAY WINDOW SUSPENDED FIXTURE	BS3O1 - 3/4		●			2
	- STOREFRONT DISPLAY WINDOW SUSPENDED FIXTURE	BS3O1 - 1		●			2
	- STOREFRONT DISPLAY WINDOW SUSPENDED FIXTURE	BS3O1 - 1.5		●			-
	- LOBBY FLOATING LIBRARY SHELVING	BS3O2 - 1	●	●			2
	- LOBBY FLOATING LIBRARY SHELVING	BS3O2 - 1.5	●	●			-
	- STANDARD WALL HANGING SYSTEM	BS3O3 - 1	●	●			-
	- STANDARD WALL HANGING SYSTEM	BS3O3 - 2	●	●			-
	- STANDARD WALL HANGING SYSTEM	BS3O3 - 3	●	●			2
	- ATRIUM WALL HANGING SYSTEM	BS3O4 - 1	●	●			-
	- ATRIUM WALL HANGING SYSTEM	BS3O4 - 2	●	●			-
	- ATRIUM WALL HANGING SYSTEM	BS3O4 - 3	●	●			2
	- MENS WALL HANGING SYSTEM	BS3O5 - 1	●	●			-
	- MENS WALL HANGING SYSTEM	BS3O5 - 2	●	●			2
	- MENS WALL HANGING SYSTEM	BS3O5 - 3	●	●			1
	- WOMENS WALL HANGING SYSTEM	BS3O6 - 2	●	●			-
	- WOMENS WALL HANGING SYSTEM	BS3O6 - 2A	●	●			1
	- WOMENS WALL HANGING SYSTEM	BS3O6 - 3	●	●			3

SYMBOLE	LOCATION	IDENTIFICATION	REQUIRES POWER	FIXED	MOVABLE	NOTE	QTE.
	- SUSPENDED HANGING SHELVES SYSTEM	BS3O7 - 2		●			14
	- SUSPENDED HANGING SHELVES SYSTEM	BS3O7 - 4		●			2
	- WOOD JEAN SHELVING	BS4O6	●	●			6
	- T STAND REGULAR	BS5O1			●		22
	- T STAND SINGLE	BS5O2			●		3
	- 4'-O" HANGING UNIT	BS5O3			●		4
	- 2'-O" CROSS HANGING UNIT	BS5O4 - 2			●		10
	- 4'-O" CROSS HANGING UNIT	BS5O4 - 4			●		-
	- ACCESSORY RACK	BS5O5			●		4
	- BELT RACK	BS5O6			●		2
	- SHOE DISPLAY	BS5O7	●	●			4
	- SALES ROLLING RACK	BS5O8			●		8
	- T SHIRT RACK	BS5O9			●		2
NOT TO SCALE	- SALES BELL RACK	BS5IO			●		2
	- GLASS FLOOR TOWER	BS5II			●		4
	- SINGLE PODIUM	BS5I2			●		28
	- LOBBY PODIUM	BS5I3			●		4
	- DISPLAY WINDOW PODIUM	BS5I4			●		4
	- 2'-O" GLASS WALL TOWER	BS5I5			●		8
	- MENS SOLO TABLE	BS7O1			●		1
	- MENS WOOD TABLE	BS7O2			●		1
	- MENS DOUBLE LAYER TABLE	BS7O3			●		1
	- LADIES SOLO TABLE	BS7O4 - A			●		4

SYMBOLE	LOCATION	IDENTIFICATION	REQUIRES POWER	FIXED	MOVABLE	NOTE	QTE.
	- ATRIUM TABLE	BS7O4 - B			●		2-
	- LADIES TABLE	BS7O4 - C			●		1
	- LADIES DOUBLE LAYER TABLE	BS7O5			●		1
	- NESTER	BS7O6			●		4
	- NESTER WITH DRAWER	BS7O7			●		4
	- WOOD NESTER	BS7O8			●		4
NOT TO SCALE	- SQUARE JEANS TABLE	BS7O9			●		2
	- ACCESSORY SHOE DISPLAY	BS7I0			●		2
	- SHOE BENCH	BS1OO8			●		2
	- WALL MIRROR	BS1OO9		●			-
	- MANNEQUIN				●		58
	- FITTING ROOM BENCH				●		10
	- EMPLOYEE LOCKERS				●		1
	- MANAGERS DESK		●		●		1
	- FRIDGE		●		●		1
	- MICROWAVE		●		●		1
	- SHOE AREA CARPET				●		1
	- MENS CARPET				●		1

LODA DESIGN

L.O.D.A inc.
1200 de Louvain Ouest, Montreal, Quebec, Canada H4N 1G5
(t) 514.382.0571 www.lodadesign.com

COPYRIGHT NOTICE

COPYRIGHT IN THESE DOCUMENTS BELONGS TO LODA INC. AND/OR RENE TRINGALI ARCHITECT. THESE DOCUMENTS MAY NOT BE FORWARDED TO OTHERS, TRANSMITTED, DOWNLOADED OR REPRODUCED IN ANY FORMAT, WHETHER PRINT OR ELECTRONIC WITHOUT THE EXPRESS, WRITTEN PERMISSION OF THE COPYRIGHT OWNER.

DISCLAIMER

USE OF THESE DOCUMENTS IS AT THE USER'S OWN RISK. THE USER SHALL INDEMNIFY AND SAVE HARMLESS LODA INC. AND THEIR EMPLOYEES, AGENTS AND CONSULTANTS FROM AND AGAINST ALL CLAIMS, LOSSES, DEMANDS, COSTS AND EXPENSES (INCLUDING LEGAL FEES), DAMAGES OR RECOVERIES (INCLUDING ANY AMOUNTS PAID IN SETTLEMENT) ARISING BY REASON OF, CAUSED, OR ALLEGED TO BE CAUSED, BY THE USER'S RELIANCE ON THESE DOCUMENTS.

No	DATE	REVISIONS	BY
-	24-11-2015	ISSUED FOR CONSTRUCTION	TW
-	24-11-2015	ISSUED FOR PERMIT	TW
-	17-11-2015	ISSUED TO CLIENT - FIRST SET	TW
-	17-11-2015	ISSUED TO LANDLORD - FOR APPROVAL	TW
-	17-11-2015	ISSUED TO ENGINEER - FINAL SET	TW
-	02-11-2015	ISSUED TO ENGINEER - FIRST SET	TW

BESTSELLER

225-A DE LIEGE OUEST
MONTREAL, QUEBEC, H2P 1H4

JOB
POLO PARK - CF
1455 PORTAGE AVENUE
WINNIPEG, MANITOBA, R3G 0W4
C.R.U. NO: 304 & 305

SHEET TITLE
LEGENDS & SCHEDULES

DRAWN BY	CHECKED	DATE	SHEET NO
TW	TI	OCT-2015	A-6.02
JOB No. BS1505		SCALE N/A	

Filename: I:\Projects\BestSeller\Bestseller_Dept_Store\BS1505_Polo Park\3- CD\A-Current\BS1505-A600.dwg Plotted: 11/25/2015 9:58 AM Plotted by: Mario Muccino

LEGEND - ACCESSORIES

SYMBOL	LOCATION	IDENTIFICATION	DESCRIPTION	TRANSFER	ORDER	TOTAL
BESTSELLER HOMME/FEMME <NOT TO SCALE>	- STOREFRONT GLASS SIGNAGE	BS1O1	2 A-4.13	-	1	1
BESTSELLER HOMME/FEMME <NOT TO SCALE>	- STOREFRONT FLOOR INTEGRATED SIGNAGE	BS1O2	1 A-4.13	-	2	2
BESTSELLER <NOT TO SCALE>	- CASH APPLIED SIGNAGE	BS1O3		-	1	1
N / A	- CONCIERGE DESK SIGNAGE	BS1O4		-	-	-
<NOT TO SCALE>	- A5 SIGN HOLDER	BS1O6		-	-	50
<NOT TO SCALE>	- A4 SIGN HOLDER	BS1O7		-	-	15
<NOT TO SCALE>	- FIXTURE SIGN HOLDER	BS1O8		-	-	45
<NOT TO SCALE>	- 4"-0" FLATBAR	BS4O1		-	-	60
<NOT TO SCALE>	- S BAR	BS4O2		-	-	-
<NOT TO SCALE>	- 12" FACEOUT	BS4O3		-	-	40
<NOT TO SCALE>	- 8"FACEOUT	BS4O4		-	-	50
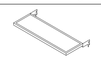 <NOT TO SCALE>	- 4"-0" GLASS SHELF	BS4O5		-	-	80
<NOT TO SCALE>	- 2'-0" GLASS SHELF	BS4O7		-	-	-
<NOT TO SCALE>	- PEG	BS4O8		-	-	300
<NOT TO SCALE>	- JEWELRY DISPLAY	BS1OO1 - A		-	-	4
<NOT TO SCALE>	- JEWELRY DISPLAY	BS1OO1 - B		-	-	4
<NOT TO SCALE>	- JEWELRY DISPLAY	BS1OO1 - C		-	-	4
<NOT TO SCALE>	- SUNGLASSES TRAY	BS1OO2		-	-	15
<NOT TO SCALE>	- CLUTCH STAND	BS1OO3		-	-	4
<NOT TO SCALE>	- ACCESSORY STAND	BS1OO4		-	-	10
<NOT TO SCALE>	- BOW-TIE STAND	BS1OO5		-	-	1
<NOT TO SCALE>	- PLEXI SHOE STAND	BS1OO6		-	-	20
<NOT TO SCALE>	- FROSTED MIRROR SHOE STAND	BS1OO7 - A		-	-	10

SYMBOLE	LOCATION	IDENTIFICATION	DESCRIPTION	TRANSFER	ORDER	TOTAL
<NOT TO SCALE>	- FROSTED MIRROR SHOE STAND	BS1OO7 - B		-	-	10
<NOT TO SCALE>	- WOOD BLOCK	BS1O1O - A		-	-	15
<NOT TO SCALE>	- WOOD BLOCK	BS1O1O - B		-	-	50
<NOT TO SCALE>	- SHOWCASE	BS1O11		-	-	-
<NOT TO SCALE>	- TIE DISPLAY	BS1O12		-	-	1
<NOT TO SCALE>	- PHOTOFRAME	BS1O13 - A		-	-	2
<NOT TO SCALE>	- PHOTOFRAME	BS1O13 - B		-	-	2
<NOT TO SCALE>	- PHOTOFRAME	BS1O13 - C		-	-	2
<NOT TO SCALE>	- PHOTOFRAME	BS1O13 - D		-	-	2

LODA DESIGN

L.O.D.A inc.
1200 de Louvain Ouest, Montreal, Quebec, Canada H4N 1G5
(t) 514.382.0571 www.lodadesign.com

COPYRIGHT NOTICE

COPYRIGHT IN THESE DOCUMENTS BELONGS TO LODA INC. AND/OR RENE TRINGALI ARCHITECT. THESE DOCUMENTS MAY NOT BE FORWARDED TO THIRD PARTIES OR REPRODUCED IN ANY FORM OR PRODUCED IN ANY FORMAT, WHETHER PRINT OR ELECTRONIC WITHOUT THE EXPRESS, WRITTEN PERMISSION OF THE COPYRIGHT OWNER.

DISCLAIMER

USE OF THESE DOCUMENTS IS AT THE USER'S OWN RISK. THE USER SHALL INDEMNIFY AND SAVE HARMLESS LODA INC., AND THEIR EMPLOYEES, AGENTS AND CONSULTANTS FROM AND AGAINST ALL CLAIMS, LOSSES, DEMANDS, COSTS AND EXPENSES (INCLUDING LEGAL FEES), DAMAGES OR RECOVERIES (INCLUDING ANY AMOUNTS PAID IN SETTLEMENT) ARISING BY REASON OF, CAUSED, OR ALLEGED TO BE CAUSED, BY THE USER'S RELIANCE ON THESE DOCUMENTS.

No	DATE	REVISIONS	BY
-	24-11-2015	ISSUED FOR CONSTRUCTION	TW
-	24-11-2015	ISSUED FOR PERMIT	TW
-	17-11-2015	ISSUED TO CLIENT - FIRST SET	TW
-	17-11-2015	ISSUED TO LANDLORD - FOR APPROVAL	TW
-	17-11-2015	ISSUED TO ENGINEER - FINAL SET	TW
-	02-11-2015	ISSUED TO ENGINEER - FIRST SET	TW

BESTSELLER

225-A DE LIEGE OUEST
MONTREAL, QUEBEC, H2P 1H4

JOB
POLO PARK - CF
1485 PORTAGE AVENUE
WINNIPEG, MANITOBA, R3G 0W4
C.R.U. NO.: 304 & 305

SHEET TITLE
LEGENDS & SCHEDULES

DRAWN BY	CHECKED	DATE	SHEET NO
TW	TI	OCT-2015	A-6.03
JOB No. BS1505		SCALE N/A	

Filename: I:\Projects\BestSeller\Bestseller_Dept_Store\BS1505_Polo Park\3- CD\A-Current\BS1505-A600.dwg Plotted: 11/25/2015 9:58 AM Plotted by: Mario Muccino